Architectural Design Manual

Sierra Pacific Clad Casement

Operating - Picture - Transom

TABLE OF CONTENTS

SIERRA PACIFIC WINDOWS

Section 1

Product Features

Below is a summary of construction characteristics and standard features for the Aluminum Clad Casement, available in both narrow and wide sash profiles, covering both operating rectangle and arched radius units, as well as fixed transoms, pictures, and geometric shapes.

Product Callouts:

- **C-SPCS**: Sierra Pacific Clad Casement
- **C-SPCSP**: Sierra Pacific Clad Casement Picture
- **C-SPCST**: Sierra Pacific Clad Casement Transom

Exterior Finish:

- Baked on, electrostatically applied powder coat finish with virtually no VOC's.
- Available in AAMA 2605 fluoropolymer finishes, from the following four design collections.
    - Color Stay™ (standard 2605)
    - Matte Textured (2604 polyester powder only)
    - Blended (standard 2605)
    - Metallics (standard 2605)
- Custom color match (standard 2605)
- Click HERE for complete list of color options.

Interior Finish:

- Wood components dried to moisture content of 12% or less.
- Standard natural (bare) select pine wood.
- Optional species: Upon request and availability. Click HERE for available wood species.
- Interior finish: Natural (standard), Clear Coat, Primed, Ultra Coat Painted and Ultra Stain
    - Primed Interior finish: white or black
    - Ultra Coat Painted: specially formulated two-part catalyzed polyurethane paint
    - Ultra Stain: water-based interior stain formulated with rich color tones
- Click HERE for complete list of color options.

Frame:

- Exterior .0625" thick extruded aluminum cladding for head, jambs, and sill; mechanically fastened mitered corners, fully injected for watertight seal; factory applied extruded drip cap.
- Interior wood frame components are select pine, solid or finger-jointed and veneer wrapped.
- Sash opening of the frame is wrapped in a black acrylic veneer.
- Frame thickness: 1-7/16" (interior), 9/16" (exterior)
- Overall frame depth: 5-3/4"
- Integral extruded aluminum nail fin with standard 4-9/16" jamb.
    - Additional jamb depths applied or loose: 4-3/4", 5", 5-1/8", 5-5/16", 6-7/16", 6-9/16", 6-11/16", 6-7/8", 7", 7-1/8", 7- 1/4", 7-5/16", 7-3/8", 8-1/8", or custom specified
- Standard two-piece interior sill stop aligning between operating and fixed picture casement units.
- Standard one-piece low profile interior sill stop on fixed casement transoms and shapes.

Sash:

- Exterior .0625" thick extruded aluminum cladding for both stiles and rails.
- 2-1/4" thick sash with sealed and mechanically fastened mortise and tenon joints.
- Interior wood sash components are treated solid select pine.
- Standard narrow or wide sash
    - Narrow Sash:
        - 1-3/4" stiles and top rail, 2-7/16" bottom rail
        - Standard removable contemporary square profile glazing bead
    - Wide Sash:
        - 2-11/16" stiles and rails
        - Standard removable contemporary profile glazing bead; optional traditional profile

Weatherstrip:

- Frame: perimeter compression style closed cell foam
- Sash: perimeter polypropylene rigid cap with flexible thermal plastic hollow bulb leaf

Hardware:

- Operators: Standard Truth Encore system with the zinc die cast 'Attraction' magnetic handle and cover in 9 available finishes.
    - Rectangle - Dual arm operating mechanism coated with Truth E-Guard® coating system, optional stainless steel.
    - Arched Radius – Straight arm operating mechanism coated with Truth E-Guard® coating system, optional stainless steel.
- Locking mechanism: Standard 'under the operator' single lock lever engaging lock hook(s) and lock keeper(s) integrated in the frame and sash.
- Hinges:
    - Rectangle - standard 13" adjustable top and bottom hinges for sash operation up to 90 degrees for ease of cleaning and removal. High performance hinge - Units wider than 36" and taller than 84"
    - Arched Radius – standard butt hinges color matched to exterior clad finish
- Lock hooks: number dependent on height
    - Up to 36" height = 1 hook
    - Over 36" and less than 72" height = 2 hooks
    - 72" and over = 3 hooks

Glazing:

- Interior glazed with exterior sealant and tape dam resulting in no excess squeeze out, with removable interior glazing beads.
- 3mm, 4mm, 5mm, 6mm, premium flat glass complying with ASTM C1036
- Standard 3/4" argon filled dual insulated glass with black warm edge spacer, ≥1" glass depending on size, optional single pane, triple insulated, laminated and laminated insulated
    - Spacer options: Standard black structural foam warm edge or optional Cardinal Endur spacer (required on any Neat and Preserve glazing options)
    - Glazing options: Standard Low-E, Low-E 366, Low-E 340, Low-E 180, and Low-E i89
    - Tint options: Bronze, Grey, Spandrel, Solar Cool Grey or Bronze
    - Obscure options: Standard (Pattern 62), Rain, Narrow Reed, Gluechip, White Laminated, Satin Etch, or custom specified
- Click HERE for complete list of decorative glass options.

Grilles:

- Simulated Divided Lites (SDL) produced with color matched exterior aluminum bars and interior wood bars in matching interior wood species and finishes, available with a shadow bar in between the glass
    - SDL bar width and profile options: 5/8", 7/8", 1" in Traditional, Putty, and Contemporary; 1-1/4" and 2" Traditional and Contemporary
- Grille Between the Glass (GBG) are installed in the insulated glass, in between the sealed glass panes, in solid colors or optional 2-tone color
    - GBG bar width and profile options: 5/8" x 3/16" Flat; 11/16" x 5/16" Contour;
    - Color options: Eight standard colors. Click HERE for complete list of available colors.
- Grille patterns for both SDL and GBG grilles include Equal, Prairie, Ladder, Craftsman, Cottage, Diamond, Cross, or custom specified; Radius patterns for shapes.

Screens:

- Interior removable full standard FlexScreen with flexible frame concealed in the interior screen channels, with View Clear (18x18) fiberglass mesh, optional View Clear Plus (20x20) fiberglass mesh.
- Optional retractable screen on non-radius units.

Accessories:

- Exterior trim profile options:
    - A-Series 2" Brickmould or Add-on Chassis
    - Factory or Field Applied (thru frame install required)
- Thirteen interior trim profile options in matching wood species
- Click HERE for complete list of exterior and interior trim profile options

Wood Preservative Treatment:

- Wood components, including all wood species, in direct contact with the exterior elements, aluminum clad, or glass are treated with our CoreGuard Plus™ patented wood preservative treatment process.

SIERRA PACIFIC WINDOWS

Section 2

Common Product Features and Accessories

Click HERE for the Common Product Features and Accessories

SIERRA PACIFIC WINDOWS

Section 3

CSI Specifications

Click HERE for the Clad Casement CSI Specification

SIERRA PACIFIC WINDOWS

Section 4

Elevations

Elevations

Clad Casement Wide Sash - Operating

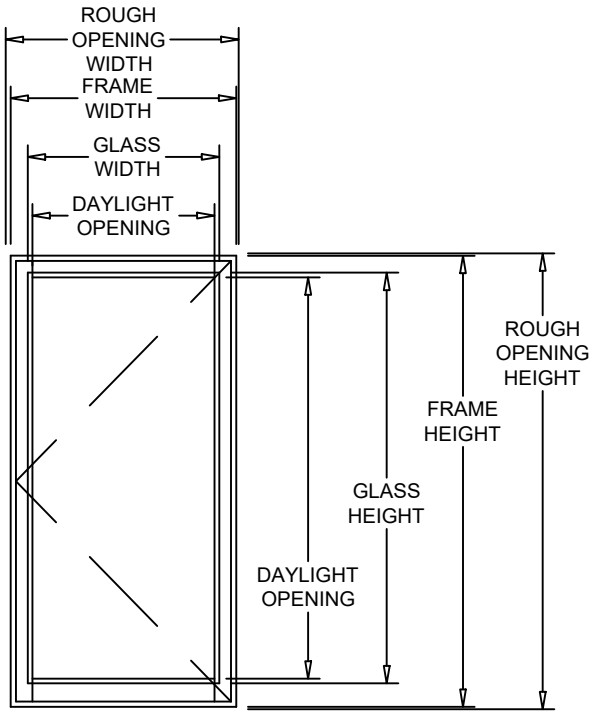

Example: C-SPCSE-2448-1

1-Wide Width					Height				
CALL OUT WIDTH	ROUGH OPENING WIDTH	OVERALL FRAME WIDTH	GLASS WIDTH	DAYLIGHT OPENING	CALL OUT HEIGHT	ROUGH OPENING HEIGHT	OVERALL HEIGHT	GLASS HEIGHT	DAYLIGHT OPENING
18	18 3/4" (476)	18" (457)	12 1/8" (308)	11" (279)	18	18 3/4" (476)	18" (457)	12 1/8" (308)	11" (279)
24	24 3/4" (629)	24" (610)	18 1/8" (460)	17" (432)	20	20 3/4" (527)	20" (508)	14 1/8" (359)	13" (330)
28	28 3/4" (730)	28" (711)	22 1/8" (562)	21" (533)	24	24 3/4" (629)	24" (610)	18 1/8" (460)	17" (432)
30	30 3/4" (781)	30" (762)	24 1/8" (613)	23" (584)	28	28 3/4" (730)	28" (711)	22 1/8" (562)	21" (533)
32	32 3/4" (832)	32" (813)	26 1/8" (664)	25" (635)	30	30 3/4" (781)	30" (762)	24 1/8" (613)	23" (584)
36	36 3/4" (933)	36" (914)	30 1/8" (765)	29" (737)	32	32 3/4" (832)	32" (813)	26 1/8" (664)	25" (635)
42	42 3/4" (1086)	42" (1067)	36 1/8" (918)	35" (889)	36	36 3/4" (933)	36" (914)	30 1/8" (765)	29" (737)
48	48 3/4" (1238)	48" (1219)	42 1/8" (1070)	41" (1041)	40	40 3/4" (1035)	40" (1016)	34 1/8" (867)	33" (838)
					42	42 3/4" (1086)	42" (1067)	36 1/8" (918)	35" (889)
					48	48 3/4" (1238)	48" (1219)	42 1/8" (1070)	41" (1041)
					54	54 3/4" (1391)	54" (1372)	48 1/8" (1222)	47" (1194)
					60	60 3/4" (1543)	60" (1524)	54 1/8" (1375)	53" (1346)
					64	64 3/4" (1645)	64" (1626)	58 1/8" (1476)	57" (1448)
					66	66 3/4" (1695)	66" (1676)	60 1/8" (1527)	59" (1499)
					72	72 3/4" (1848)	72" (1829)	66 1/8" (1680)	65" (1651)
					78	78 3/4" (2000)	78" (1981)	72 1/8" (1832)	71" (1803)
					80	80 3/4" (2051)	80" (2032)	74 1/8" (1883)	73" (1854)
					84	84 3/4" (2153)	84" (2134)	78 1/8" (1984)	77" (1956)
					96	96 3/4" (2457)	96" (2438)	90 1/8" (2289)	89" (2261)

Operations available: Left, Right or Stationary
Chart reflects standard sizes. Custom sizes available in 1/16" increments.
Note: For standard CAD layout elevations, visit www.SierraPacificWindows.com

Elevations Viewed from Exterior

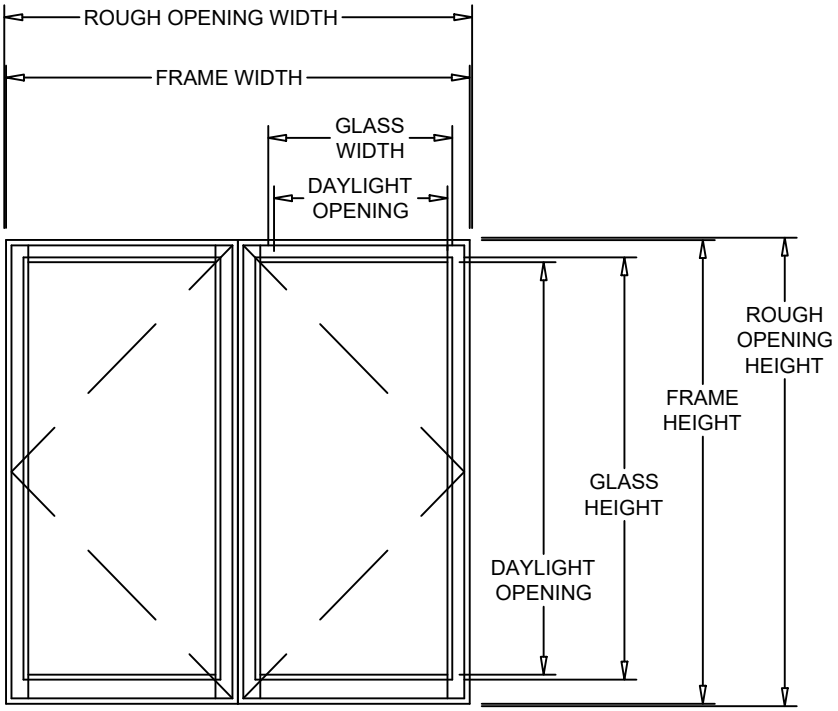

Example: C-SPCSE-2448-2

2-Wide Width				
CALL OUT WIDTH	ROUGH OPENING WIDTH	OVERALL FRAME WIDTH	GLASS WIDTH	DAYLIGHT OPENING
18	36 3/4" (933)	36" (914)	12 1/8" (308)	11" (279)
24	48 3/4" (1238)	48" (1219)	18 1/8" (460)	17" (432)
28	56 3/4" (1441)	56" (1422)	22 1/8" (562)	21" (533)
30	60 3/4" (1543)	60" (1524)	24 1/8" (613)	23" (584)
32	64 3/4" (1645)	64" (1626)	26 1/8" (664)	25" (635)
36	72 3/4" (1848)	72" (1829)	30 1/8" (765)	29" (737)
42	84 3/4" (2153)	84" (2134)	36 1/8" (918)	35" (889)
48	96 3/4" (2457)	96" (2438)	42 1/8" (1070)	41" (1041)

Height				
CALL OUT HEIGHT	ROUGH OPENING HEIGHT	FRAME HEIGHT	GLASS HEIGHT	DAYLIGHT OPENING
18	18 3/4" (476)	18" (457)	12 1/8" (308)	11" (279)
20	20 3/4" (527)	20" (508)	14 1/8" (359)	13" (330)
24	24 3/4" (629)	24" (610)	18 1/8" (460)	17" (432)
28	28 3/4" (730)	28" (711)	22 1/8" (562)	21" (533)
30	30 3/4" (781)	30" (762)	24 1/8" (613)	23" (584)
32	32 3/4" (832)	32" (813)	26 1/8" (664)	25" (635)
36	36 3/4" (933)	36" (914)	30 1/8" (765)	29" (737)
40	40 3/4" (1035)	40" (1016)	34 1/8" (867)	33" (838)
42	42 3/4" (1086)	42" (1067)	36 1/8" (918)	35" (889)
48	48 3/4" (1238)	48" (1219)	42 1/8" (1070)	41" (1041)
54	54 3/4" (1391)	54" (1372)	48 1/8" (1222)	47" (1194)
60	60 3/4" (1543)	60" (1524)	54 1/8" (1375)	53" (1346)
64	64 3/4" (1645)	64" (1626)	58 1/8" (1476)	57" (1448)
66	66 3/4" (1695)	66" (1676)	60 1/8" (1527)	59" (1499)
72	72 3/4" (1848)	72" (1829)	66 1/8" (1680)	65" (1651)
78	78 3/4" (2000)	78" (1981)	72 1/8" (1832)	71" (1803)
80	80 3/4" (2051)	80" (2032)	74 1/8" (1883)	73" (1854)
84	84 3/4" (2153)	84" (2134)	78 1/8" (1984)	77" (1956)
96	96 3/4" (2457)	96" (2438)	90 1/8" (2289)	89" (2261)

Operations available: Left, Right or Stationary
Chart reflects standard sizes. Custom sizes available in 1/16" increments.
Maximum Factory Mull: 144"x72" or 72"x144" or 18 United feet, or 72 sq. ft.
Note: For standard CAD layout elevations, visit www.SierraPacificWindows.com

Elevations Viewed from Exterior

Elevations

Clad Casement Wide Sash - Operating

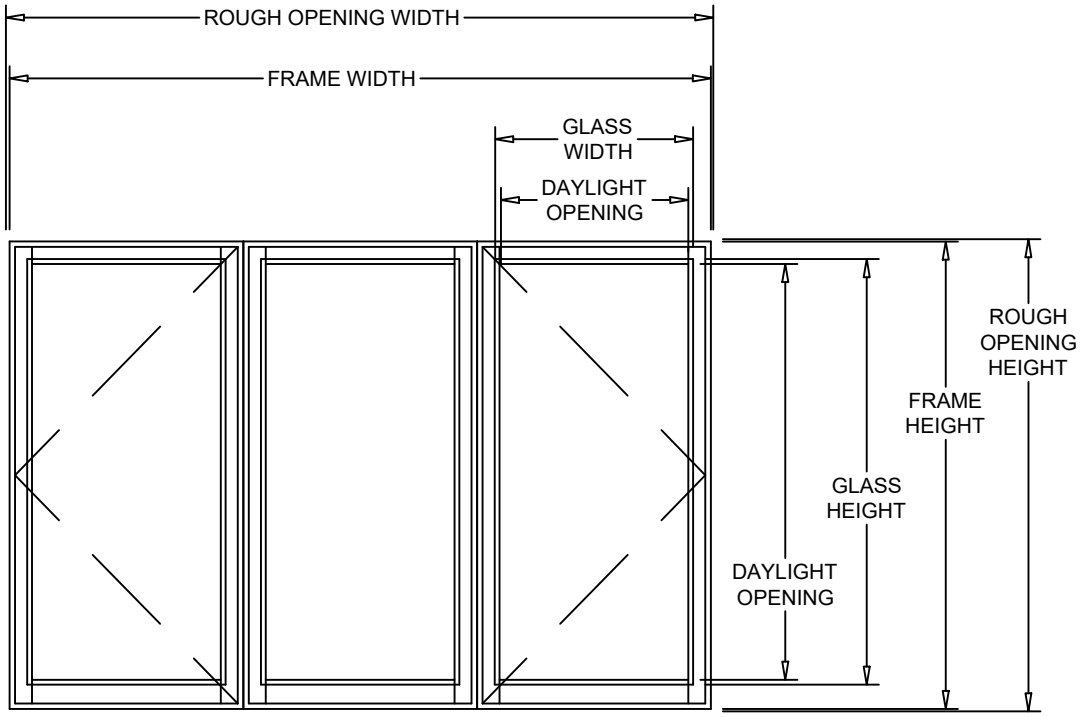

Example: C-SPCSE-2448-3

3-Wide Width				
CALL OUT WIDTH	ROUGH OPENING WIDTH	OVERALL FRAME WIDTH	GLASS WIDTH	DAYLIGHT OPENING
18	54 3/4" (1391)	54" (1372)	12 1/8" (308)	11" (279)
24	72 3/4" (1848)	72" (1829)	18 1/8" (460)	17" (432)
28	84 3/4" (2153)	84" (2134)	22 1/8" (562)	21" (533)
30	90 3/4" (2305)	90" (2286)	24 1/8" (613)	23" (584)
32	96 3/4" (2457)	96" (2438)	26 1/8" (664)	25" (635)
36	108 3/4" (2762)	108" (2743)	30 1/8" (765)	29" (737)
42	126 3/4" (3219)	126" (3200)	36 1/8" (918)	35" (889)
48	144 3/4" (3677)	144" (3658)	42 1/8" (1070)	41" (1041)

Height				
CALL OUT HEIGHT	ROUGH OPENING HEIGHT	FRAME HEIGHT	GLASS HEIGHT	DAYLIGHT OPENING
18	18 3/4" (476)	18" (457)	12 1/8" (308)	11" (279)
20	20 3/4" (527)	20" (508)	14 1/8" (359)	13" (330)
24	24 3/4" (629)	24" (610)	18 1/8" (460)	17" (432)
28	28 3/4" (730)	28" (711)	22 1/8" (562)	21" (533)
30	30 3/4" (781)	30" (762)	24 1/8" (613)	23" (584)
32	32 3/4" (832)	32" (813)	26 1/8" (664)	25" (635)
36	36 3/4" (933)	36" (914)	30 1/8" (765)	29" (737)
40	40 3/4" (1035)	40" (1016)	34 1/8" (867)	33" (838)
42	42 3/4" (1086)	42" (1067)	36 1/8" (918)	35" (889)
48	48 3/4" (1238)	48" (1219)	42 1/8" (1070)	41" (1041)
54	54 3/4" (1391)	54" (1372)	48 1/8" (1222)	47" (1194)
60	60 3/4" (1543)	60" (1524)	54 1/8" (1375)	53" (1346)
64	64 3/4" (1645)	64" (1626)	58 1/8" (1476)	57" (1448)
66	66 3/4" (1695)	66" (1676)	60 1/8" (1527)	59" (1499)
72	72 3/4" (1848)	72" (1829)	66 1/8" (1680)	65" (1651)
78	78 3/4" (2000)	78" (1981)	72 1/8" (1832)	71" (1803)
80	80 3/4" (2051)	80" (2032)	74 1/8" (1883)	73" (1854)
84	84 3/4" (2153)	84" (2134)	78 1/8" (1984)	77" (1956)
96	96 3/4" (2457)	96" (2438)	90 1/8" (2289)	89" (2261)

Operations available: Left, Right or Stationary
Chart reflects standard sizes. Custom sizes available in 1/16" increments.
Maximum Factory Mull: 144"x72" or 72"x144" or 18 United feet, or 72 sq. ft.
Note: For standard CAD layout elevations, visit www.SierraPacificWindows.com

Elevations Viewed from Exterior

Elevations

Clad Casement Wide Sash - Operating

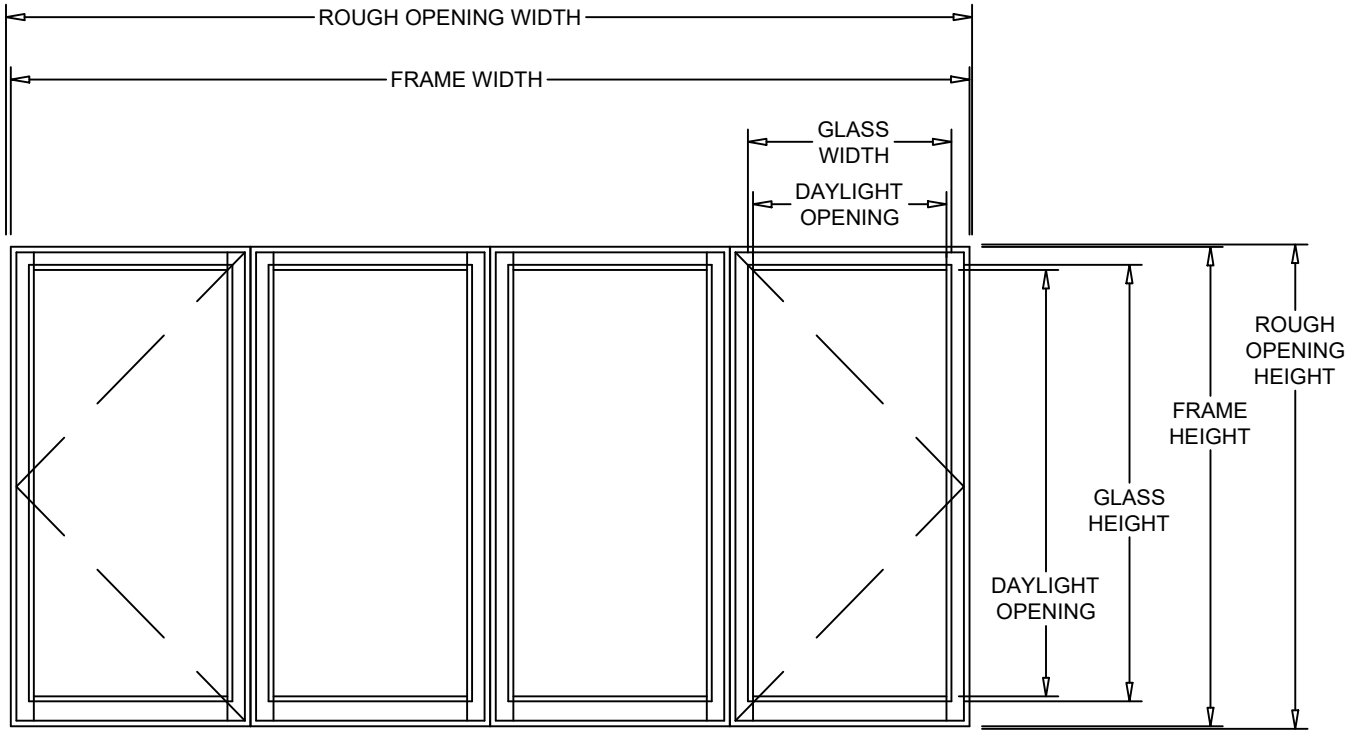

Example: C-SPCSE-2448-4

4-Wide Width				
CALL OUT WIDTH	ROUGH OPENING WIDTH	OVERALL FRAME WIDTH	GLASS WIDTH	DAYLIGHT OPENING
18	72 3/4" (1848)	72" (1829)	12 1/8" (308)	11" (279)
24	96 3/4" (2457)	96" (2438)	18 1/8" (460)	17" (432)
28	112 3/4" (2864)	112" (2845)	22 1/8" (562)	21" (533)
30	120 3/4" (3067)	120" (3048)	24 1/8" (613)	23" (584)
32	128 3/4" (3270)	128" (3251)	26 1/8" (664)	25" (635)
36	144 3/4" (3677)	144" (3658)	30 1/8" (765)	29" (737)

Operations available: Left, Right or Stationary
Chart reflects standard sizes. Custom sizes available in 1/16" increments.
Maximum Factory Mull: 144"x72" or 72"x144" or 18 United feet, or 72 sq. ft.
Note: For standard CAD layout elevations, visit www.SierraPacificWindows.com

Height				
CALL OUT HEIGHT	ROUGH OPENING HEIGHT	FRAME HEIGHT	GLASS HEIGHT	DAYLIGHT OPENING
18	18 3/4" (476)	18" (457)	12 1/8" (308)	11" (279)
20	20 3/4" (527)	20" (508)	14 1/8" (359)	13" (330)
24	24 3/4" (629)	24" (610)	18 1/8" (460)	17" (432)
28	28 3/4" (730)	28" (711)	22 1/8" (562)	21" (533)
30	30 3/4" (781)	30" (762)	24 1/8" (613)	23" (584)
32	32 3/4" (832)	32" (813)	26 1/8" (664)	25" (635)
36	36 3/4" (933)	36" (914)	30 1/8" (765)	29" (737)
40	40 3/4" (1035)	40" (1016)	34 1/8" (867)	33" (838)
42	42 3/4" (1086)	42" (1067)	36 1/8" (918)	35" (889)
48	48 3/4" (1238)	48" (1219)	42 1/8" (1070)	41" (1041)
54	54 3/4" (1391)	54" (1372)	48 1/8" (1222)	47" (1194)
60	60 3/4" (1543)	60" (1524)	54 1/8" (1375)	53" (1346)
64	64 3/4" (1645)	64" (1626)	58 1/8" (1476)	57" (1448)
66	66 3/4" (1695)	66" (1676)	60 1/8" (1527)	59" (1499)
72	72 3/4" (1848)	72" (1829)	66 1/8" (1680)	65" (1651)
78	78 3/4" (2000)	78" (1981)	72 1/8" (1832)	71" (1803)
80	80 3/4" (2051)	80" (2032)	74 1/8" (1883)	73" (1854)
84	84 3/4" (2153)	84" (2134)	78 1/8" (1984)	77" (1956)
96	96 3/4" (2457)	96" (2438)	90 1/8" (2289)	89" (2261)

Elevations Viewed from Exterior

Elevations

Clad Casement Wide Sash - Operating

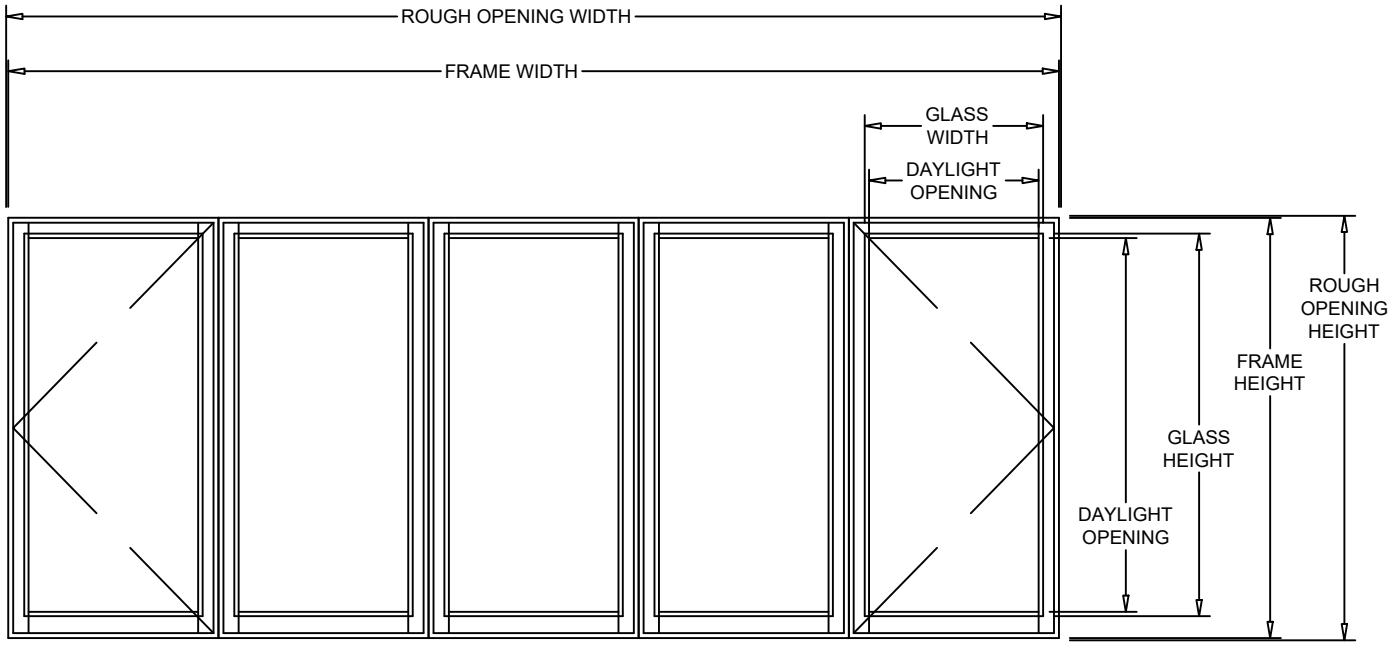

xample: C-SPCSE-2448-5

5-Wide Width				
CALL OUT WIDTH	ROUGH OPENING WIDTH	OVERALL FRAME WIDTH	GLASS WIDTH	DAYLIGHT OPENING
18	90 3/4" (2305)	90" (2286)	12 1/8" (308)	11" (279)
24	120 3/4" (3067)	120" (3048)	18 1/8" (460)	17" (432)
28	140 3/4" (3575)	140" (3556)	22 1/8" (562)	21" (533)

Operations available: Left, Right or Stationary
Chart reflects standard sizes. Custom sizes available in 1/16" increments.
Maximum Factory Mull: 144"x72" or 72"x144" or 18 United feet, or 72 sq. ft.
Note: For standard CAD layout elevations, visit www.SierraPacificWindows.com

Height				
CALL OUT HEIGHT	ROUGH OPENING HEIGHT	FRAME HEIGHT	GLASS HEIGHT	DAYLIGHT OPENING
18	18 3/4" (476)	18" (457)	12 1/8" (308)	11" (279)
20	20 3/4" (527)	20" (508)	14 1/8" (359)	13" (330)
24	24 3/4" (629)	24" (610)	18 1/8" (460)	17" (432)
28	28 3/4" (730)	28" (711)	22 1/8" (562)	21" (533)
30	30 3/4" (781)	30" (762)	24 1/8" (613)	23" (584)
32	32 3/4" (832)	32" (813)	26 1/8" (664)	25" (635)
36	36 3/4" (933)	36" (914)	30 1/8" (765)	29" (737)
40	40 3/4" (1035)	40" (1016)	34 1/8" (867)	33" (838)
42	42 3/4" (1086)	42" (1067)	36 1/8" (918)	35" (889)
48	48 3/4" (1238)	48" (1219)	42 1/8" (1070)	41" (1041)
54	54 3/4" (1391)	54" (1372)	48 1/8" (1222)	47" (1194)
60	60 3/4" (1543)	60" (1524)	54 1/8" (1375)	53" (1346)
64	64 3/4" (1645)	64" (1626)	58 1/8" (1476)	57" (1448)
66	66 3/4" (1695)	66" (1676)	60 1/8" (1527)	59" (1499)
72	72 3/4" (1848)	72" (1829)	66 1/8" (1680)	65" (1651)
78	78 3/4" (2000)	78" (1981)	72 1/8" (1832)	71" (1803)
80	80 3/4" (2051)	80" (2032)	74 1/8" (1883)	73" (1854)
84	84 3/4" (2153)	84" (2134)	78 1/8" (1984)	77" (1956)
96	96 3/4" (2457)	96" (2438)	90 1/8" (2289)	89" (2261)

Elevations Viewed from Exterior

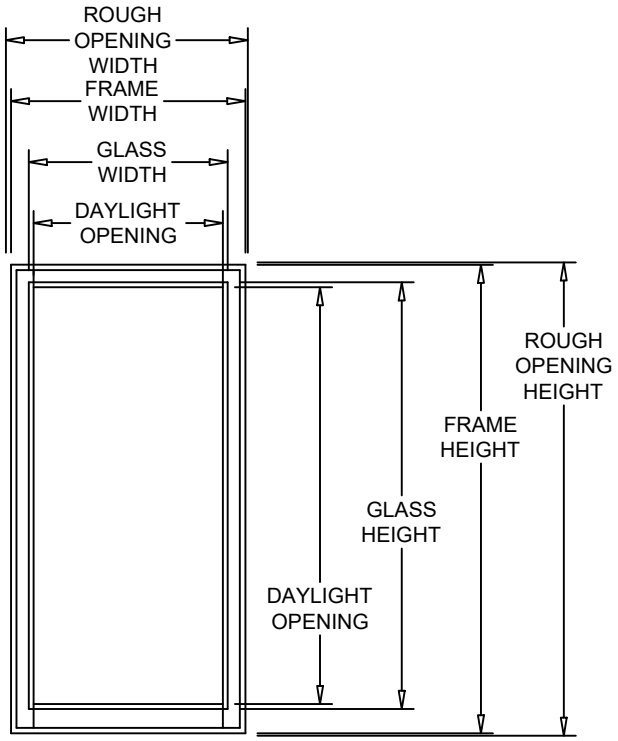

Example: C-SPCSE-2448-1

1-Wide Width					Height				
CALL OUT WIDTH	ROUGH OPENING WIDTH	FRAME WIDTH	GLASS WIDTH	DAYLIGHT OPENING	CALL OUT HEIGHT	ROUGH OPENING HEIGHT	FRAME HEIGHT	GLASS HEIGHT	DAYLIGHT OPENING
18	18 3/4" (476)	18" (457)	12 1/8" (308)	11" (279)	18	18 3/4" (476)	18" (457)	12 1/8" (308)	11" (279)
24	24 3/4" (629)	24" (610)	18 1/8" (460)	17" (432)	20	20 3/4" (527)	20" (508)	14 1/8" (359)	13" (330)
28	28 3/4" (730)	28" (711)	22 1/8" (562)	21" (533)	24	24 3/4" (629)	24" (610)	18 1/8" (460)	17" (432)
30	30 3/4" (781)	30" (762)	24 1/8" (613)	23" (584)	28	28 3/4" (730)	28" (711)	22 1/8" (562)	21" (533)
32	32 3/4" (832)	32" (813)	26 1/8" (664)	25" (635)	30	30 3/4" (781)	30" (762)	24 1/8" (613)	23" (584)
36	36 3/4" (933)	36" (914)	30 1/8" (765)	29" (737)	32	32 3/4" (832)	32" (813)	26 1/8" (664)	25" (635)
42	42 3/4" (1086)	42" (1067)	36 1/8" (918)	35" (889)	36	36 3/4" (933)	36" (914)	30 1/8" (765)	29" (737)
48	48 3/4" (1238)	48" (1219)	42 1/8" (1070)	41" (1041)	40	40 3/4" (1035)	40" (1016)	34 1/8" (867)	33" (838)
54	54 3/4" (1391)	54" (1372)	48 1/8" (1222)	47" (1194)	42	42 3/4" (1086)	42" (1067)	36 1/8" (918)	35" (889)
60	60 3/4" (1543)	60" (1524)	54 1/8" (1375)	53" (1346)	48	48 3/4" (1238)	48" (1219)	42 1/8" (1070)	41" (1041)
66	66 3/4" (1695)	66" (1676)	60 1/8" (1527)	59" (1499)	54	54 3/4" (1391)	54" (1372)	48 1/8" (1222)	47" (1194)
72	72 3/4" (1848)	72" (1829)	66 1/8" (1680)	65" (1651)	60	60 3/4" (1543)	60" (1524)	54 1/8" (1375)	53" (1346)
76	76 3/4" (1949)	76" (1930)	70 1/8" (1781)	69" (1753)	64	64 3/4" (1645)	64" (1626)	58 1/8" (1476)	57" (1448)
80	80 3/4" (2051)	80" (2032)	74 1/8" (1883)	73" (1854)	66	66 3/4" (1695)	66" (1676)	60 1/8" (1527)	59" (1499)
84	84 3/4" (2153)	84" (2134)	78 1/8" (1984)	77" (1956)	72	72 3/4" (1848)	72" (1829)	66 1/8" (1680)	65" (1651)
96	96 3/4" (2457)	96" (2438)	90 1/8" (2289)	89" (2261)	78	78 3/4" (2000)	78" (1981)	72 1/8" (1832)	71" (1803)
108	108 3/4" (2762)	108" (2743)	102 1/8" (2594)	101" (2565)	80	80 3/4" (2051)	80" (2032)	74 1/8" (1883)	73" (1854)
120	120 3/4" (3067)	120" (3048)	114 1/8" (2899)	113" (2870)	84	84 3/4" (2153)	84" (2134)	78 1/8" (1984)	77" (1956)
					96	96 3/4" (2457)	96" (2438)	90 1/8" (2289)	89" (2261)
					108	108 3/4" (2762)	108" (2743)	102 1/8" (2594)	101" (2565)
					120	120 3/4" (3067)	120" (3048)	114 1/8" (2899)	113" (2870)

Chart reflects standard sizes. Custom sizes available in 1/16" increments.
Note: For standard CAD layout elevations, visit www.SierraPacificWindows.com

Elevations Viewed from Exterior

Elevations

Clad Casement Wide Sash - Picture

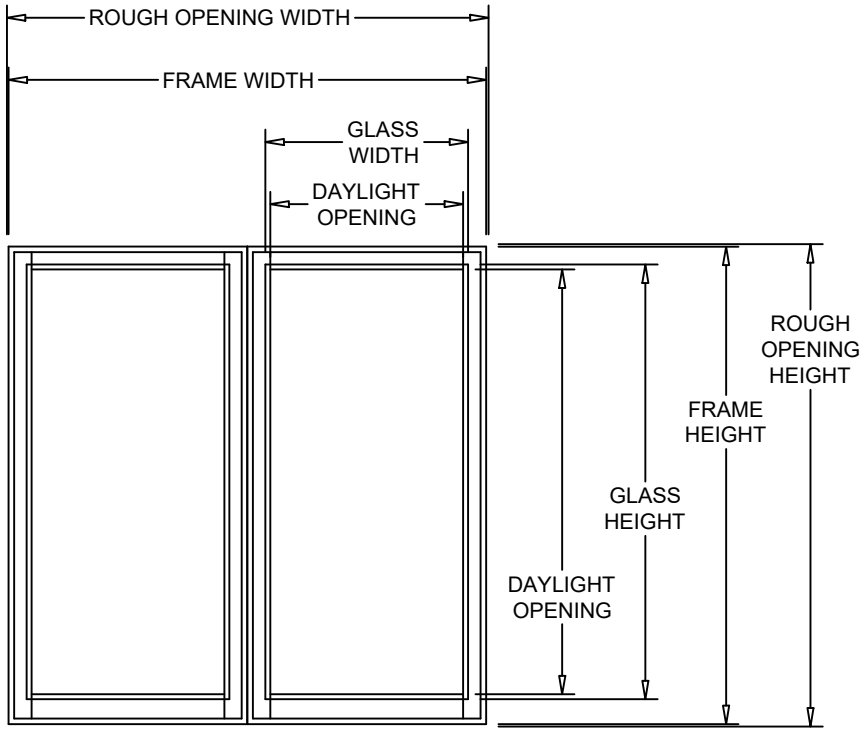

Example: C-SPCSE-2448-2

2-Wide Width					Height				
CALL OUT WIDTH	ROUGH OPENING WIDTH	OVERALL FRAME WIDTH	GLASS WIDTH	DAYLIGHT OPENING	CALL OUT HEIGHT	ROUGH OPENING HEIGHT	FRAME HEIGHT	GLASS HEIGHT	DAYLIGHT OPENING
18	36 3/4 (933)	36" (914)	12 1/8" (308)	11" (279)	18	18 3/4" (476)	18" (457)	12 1/8" (308)	11" (279)
24	48 3/4 (1238)	48" (1219)	18 1/8" (460)	17" (432)	20	20 3/4" (527)	20" (508)	14 1/8" (359)	13" (330)
28	56 3/4 (1441)	56" (1422)	22 1/8" (562)	21" (533)	24	24 3/4" (629)	24" (610)	18 1/8" (460)	17" (432)
30	60 3/4 (1543)	60" (1524)	24 1/8" (613)	23" (584)	28	28 3/4" (730)	28" (711)	22 1/8" (562)	21" (533)
32	64 3/4 (1645)	64" (1626)	26 1/8" (664)	25" (635)	30	30 3/4" (781)	30" (762)	24 1/8" (613)	23" (584)
36	72 3/4 (1848)	72" (1829)	30 1/8" (765)	29" (737)	32	32 3/4" (832)	32" (813)	26 1/8" (664)	25" (635)
42	84 3/4 (2153)	84" (2134)	36 1/8" (918)	35" (889)	36	36 3/4" (933)	36" (914)	30 1/8" (765)	29" (737)
48	96 3/4 (2457)	96" (2438)	42 1/8" (1070)	41" (1041)	40	40 3/4" (1035)	40" (1016)	34 1/8" (867)	33" (838)
54	108 3/4 (2762)	108" (2743)	48 1/8" (1222)	47" (1194)	42	42 3/4" (1086)	42" (1067)	36 1/8" (918)	35" (889)
60	120 3/4 (3067)	120" (3048)	54 1/8" (1375)	53" (1346)	48	48 3/4" (1238)	48" (1219)	42 1/8" (1070)	41" (1041)
66	132 3/4 (3372)	132" (3353)	60 1/8" (1527)	59" (1499)	54	54 3/4" (1391)	54" (1372)	48 1/8" (1222)	47" (1194)
72	144 3/4 (3677)	144" (3658)	66 1/8" (1680)	65" (1651)	60	60 3/4" (1543)	60" (1524)	54 1/8" (1375)	53" (1346)
					64	64 3/4" (1645)	64" (1626)	58 1/8" (1476)	57" (1448)
					66	66 3/4" (1695)	66" (1676)	60 1/8" (1527)	59" (1499)
					72	72 3/4" (1848)	72" (1829)	66 1/8" (1680)	65" (1651)
					78	78 3/4" (2000)	78" (1981)	72 1/8" (1832)	71" (1803)
					80	80 3/4" (2051)	80" (2032)	74 1/8" (1883)	73" (1854)
					84	84 3/4" (2153)	84" (2134)	78 1/8" (1984)	77" (1956)
					96	96 3/4" (2457)	96" (2438)	90 1/8" (2289)	89" (2261)
					108	108 3/4" (2762)	108" (2743)	102 1/8" (2594)	101" (2565)
					120	120 3/4" (3067)	120" (3048)	114 1/8" (2899)	113" (2870)

Chart reflects standard sizes. Custom sizes available in 1/16" increments.
Maximum Factory Mull: 144"x72" or 72"x144" or 18 United feet, or 72 sq. ft.
Note: For standard CAD layout elevations, visit www.SierraPacificWindows.com

Elevations Viewed from Exterior

Elevations

Clad Casement Wide Sash - Picture

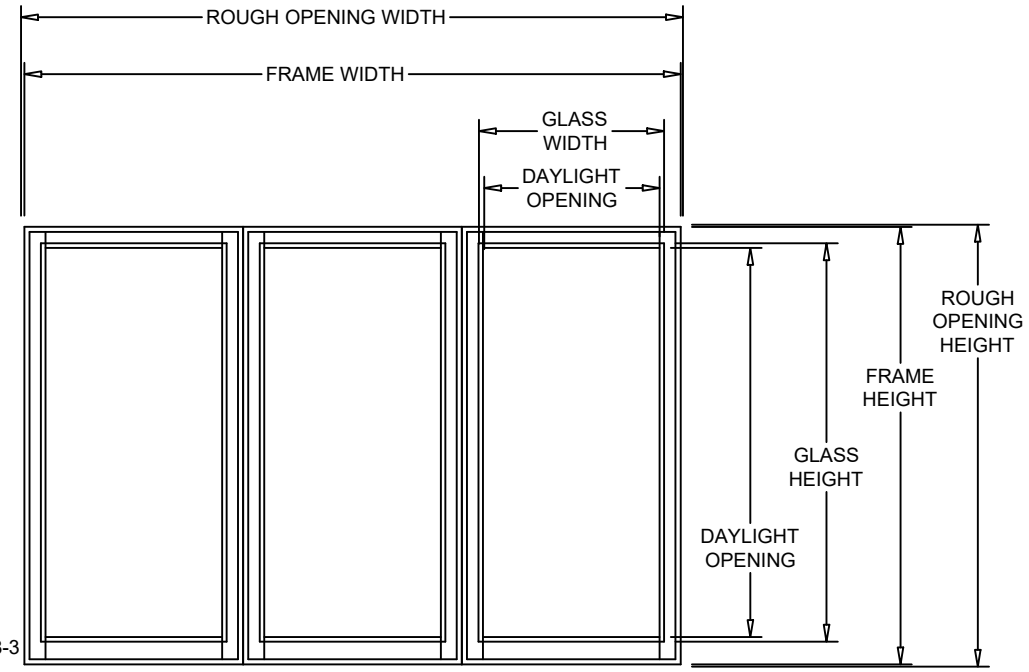

Example: C-SPCSE-2448-3

3-Wide Width				
CALL OUT WIDTH	ROUGH OPENING WIDTH	OVERALL FRAME WIDTH	GLASS WIDTH	DAYLIGHT OPENING
18	54 3/4" (1391)	54" (1372)	12 1/8" (308)	11" (279)
24	72 3/4" (1848)	72" (1829)	18 1/8" (460)	17" (432)
28	84 3/4" (2153)	84" (2134)	22 1/8" (562)	21" (533)
30	90 3/4" (2305)	90" (2286)	24 1/8" (613)	23" (584)
32	96 3/4" (2457)	96" (2438)	26 1/8" (664)	25" (635)
36	108 3/4" (2762)	108" (2743)	30 1/8" (765)	29" (737)
42	126 3/4" (3219)	126" (3200)	36 1/8" (918)	35" (889)
48	144 3/4" (3677)	144" (3658)	42 1/8" (1070)	41" (1041)

Height				
CALL OUT HEIGHT	ROUGH OPENING HEIGHT	FRAME HEIGHT	GLASS HEIGHT	DAYLIGHT OPENING
18	18 3/4" (476)	18" (457)	12 1/8" (308)	11" (279)
20	20 3/4" (527)	20" (508)	14 1/8" (359)	13" (330)
24	24 3/4" (629)	24" (610)	18 1/8" (460)	17" (432)
28	28 3/4" (730)	28" (711)	22 1/8" (562)	21" (533)
30	30 3/4" (781)	30" (762)	24 1/8" (613)	23" (584)
32	32 3/4" (832)	32" (813)	26 1/8" (664)	25" (635)
36	36 3/4" (933)	36" (914)	30 1/8" (765)	29" (737)
40	40 3/4" (1035)	40" (1016)	34 1/8" (867)	33" (838)
42	42 3/4" (1086)	42" (1067)	36 1/8" (918)	35" (889)
48	48 3/4" (1238)	48" (1219)	42 1/8" (1070)	41" (1041)
54	54 3/4" (1391)	54" (1372)	48 1/8" (1222)	47" (1194)
60	60 3/4" (1543)	60" (1524)	54 1/8" (1375)	53" (1346)
64	64 3/4" (1645)	64" (1626)	58 1/8" (1476)	57" (1448)
66	66 3/4" (1695)	66" (1676)	60 1/8" (1527)	59" (1499)
72	72 3/4" (1848)	72" (1829)	66 1/8" (1680)	65" (1651)
78	78 3/4" (2000)	78" (1981)	72 1/8" (1832)	71" (1803)
80	80 3/4" (2051)	80" (2032)	74 1/8" (1883)	73" (1854)
84	84 3/4" (2153)	84" (2134)	78 1/8" (1984)	77" (1956)
96	96 3/4" (2457)	96" (2438)	90 1/8" (2289)	89" (2261)
108	108 3/4" (2762)	108" (2743)	102 1/8" (2594)	101" (2565)
120	120 3/4" (3067)	120" (3048)	114 1/8" (2899)	113" (2870)

Chart reflects standard sizes. Custom sizes available in 1/16" increments.
Maximum Factory Mull: 144"x72" or 72"x144" or 18 United feet, or 72 sq. ft.
Note: For standard CAD layout elevations, visit www.SierraPacificWindows.com

Elevations Viewed from Exterior

Elevations

Clad Casement Wide Sash - Picture

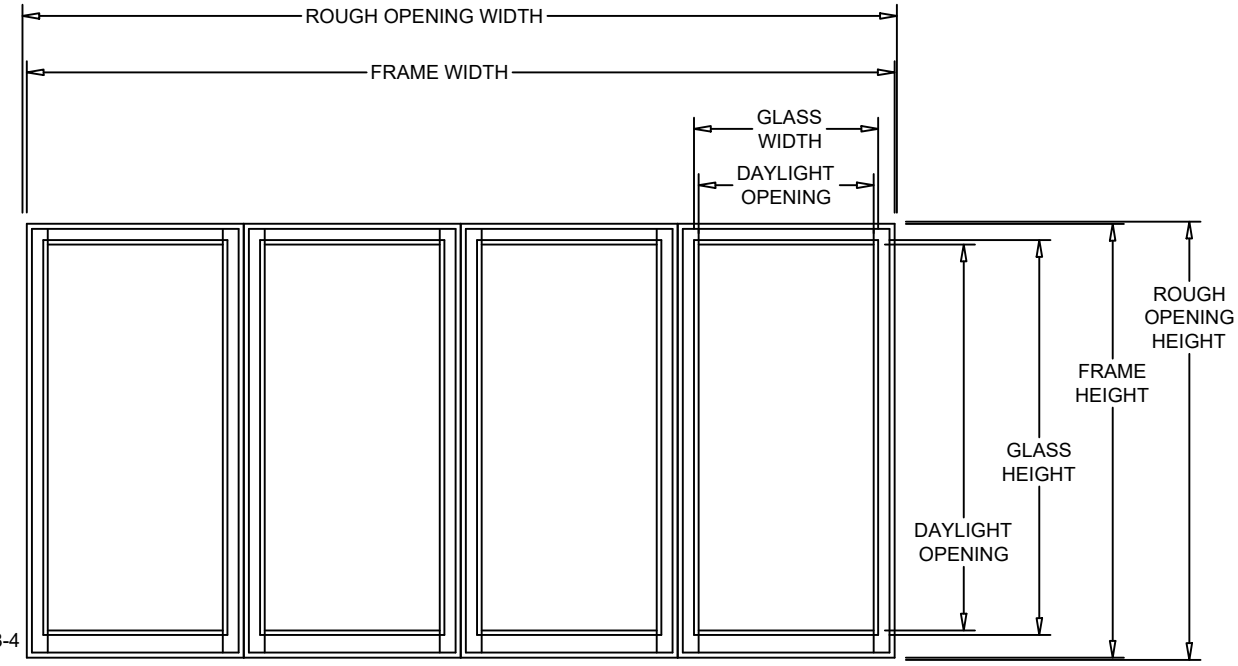

Example: C-SPCSE-2448-4

4-Wide Width				
CALL OUT WIDTH	ROUGH OPENING WIDTH	OVERALL FRAME WIDTH	GLASS WIDTH	DAYLIGHT OPENING
18	72 3/4" (1848)	72" (1829)	12 1/8" (308)	11" (279)
24	96 3/4" (2457)	96" (2438)	18 1/8" (460)	17" (432)
28	112 3/4" (2864)	112" (2845)	22 1/8" (562)	21" (533)
30	120 3/4" (3067)	120" (3048)	24 1/8" (613)	23" (584)
32	128 3/4" (3270)	128" (3251)	26 1/8" (664)	25" (635)
36	144 3/4" (3677)	144" (3658)	30 1/8" (765)	29" (737)

Chart reflects standard sizes. Custom sizes available in 1/16" increments.
Maximum Factory Mull: 144"x72" or 72"x144" or 18 United feet, or 72 sq. ft.
Note: For standard CAD layout elevations, visit www.SierraPacificWindows.com

Height				
CALL OUT HEIGHT	ROUGH OPENING HEIGHT	FRAME HEIGHT	GLASS HEIGHT	DAYLIGHT OPENING
18	18 3/4" (476)	18" (457)	12 1/8" (308)	11" (279)
20	20 3/4" (527)	20" (508)	14 1/8" (359)	13" (330)
24	24 3/4" (629)	24" (610)	18 1/8" (460)	17" (432)
28	28 3/4" (730)	28" (711)	22 1/8" (562)	21" (533)
30	30 3/4" (781)	30" (762)	24 1/8" (613)	23" (584)
32	32 3/4" (832)	32" (813)	26 1/8" (664)	25" (635)
36	36 3/4" (933)	36" (914)	30 1/8" (765)	29" (737)
40	40 3/4" (1035)	40" (1016)	34 1/8" (867)	33" (838)
42	42 3/4" (1086)	42" (1067)	36 1/8" (918)	35" (889)
48	48 3/4" (1238)	48" (1219)	42 1/8" (1070)	41" (1041)
54	54 3/4" (1391)	54" (1372)	48 1/8" (1222)	47" (1194)
60	60 3/4" (1543)	60" (1524)	54 1/8" (1375)	53" (1346)
64	64 3/4" (1645)	64" (1626)	58 1/8" (1476)	57" (1448)
66	66 3/4" (1695)	66" (1676)	60 1/8" (1527)	59" (1499)
72	72 3/4" (1848)	72" (1829)	66 1/8" (1680)	65" (1651)
78	78 3/4" (2000)	78" (1981)	72 1/8" (1832)	71" (1803)
80	80 3/4" (2051)	80" (2032)	74 1/8" (1883)	73" (1854)
84	84 3/4" (2153)	84" (2134)	78 1/8" (1984)	77" (1956)
96	96 3/4" (2457)	96" (2438)	90 1/8" (2289)	89" (2261)
108	108 3/4" (2762)	108" (2743)	102 1/8" (2594)	101" (2565)
120	120 3/4" (3067)	120" (3048)	114 1/8" (2899)	113" (2870)

Elevations Viewed from Exterior

Elevations

Clad Casement Wide Sash - Picture

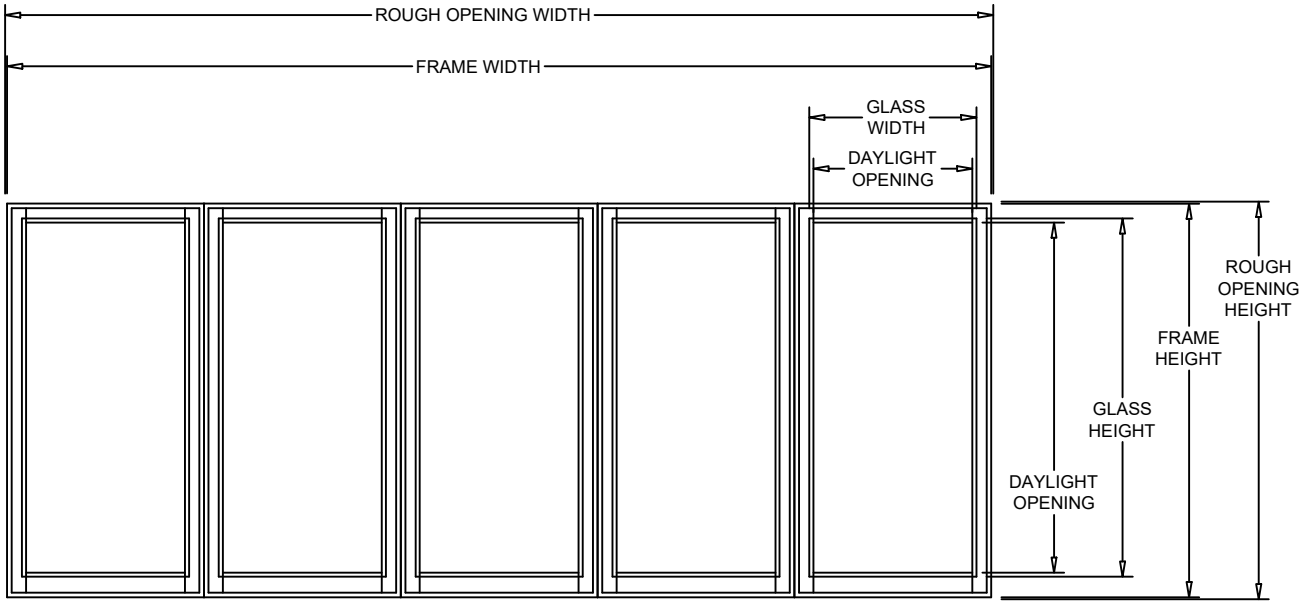

Example: C-SPCSE-2448-5

5-Wide Width				
CALL OUT WIDTH	ROUGH OPENING WIDTH	OVERALL FRAME WIDTH	GLASS WIDTH	DAYLIGHT OPENING
18	90 3/4" (2305)	90" (2286)	12 1/8" (308)	11" (279)
24	120 3/4" (3067)	120" (3048)	18 1/8" (460)	17" (432)
28	140 3/4" (3575)	140" (3556)	22 1/8" (562)	21" (533)

Chart reflects standard sizes. Custom sizes available in 1/16" increments.
Maximum Factory Mull: 144"x72" or 72"x144" or 18 United feet, or 72 sq. ft.
Note: For standard CAD layout elevations, visit www.SierraPacificWindows.com

Height				
CALL OUT HEIGHT	ROUGH OPENING HEIGHT	FRAME HEIGHT	GLASS HEIGHT	DAYLIGHT OPENING
18	18 3/4" (476)	18" (457)	12 1/8" (308)	11" (279)
20	20 3/4" (527)	20" (508)	14 1/8" (359)	13" (330)
24	24 3/4" (629)	24" (610)	18 1/8" (460)	17" (432)
28	28 3/4" (730)	28" (711)	22 1/8" (562)	21" (533)
30	30 3/4" (781)	30" (762)	24 1/8" (613)	23" (584)
32	32 3/4" (832)	32" (813)	26 1/8" (664)	25" (635)
36	36 3/4" (933)	36" (914)	30 1/8" (765)	29" (737)
40	40 3/4" (1035)	40" (1016)	34 1/8" (867)	33" (838)
42	42 3/4" (1086)	42" (1067)	36 1/8" (918)	35" (889)
48	48 3/4" (1238)	48" (1219)	42 1/8" (1070)	41" (1041)
54	54 3/4" (1391)	54" (1372)	48 1/8" (1222)	47" (1194)
60	60 3/4" (1543)	60" (1524)	54 1/8" (1375)	53" (1346)
64	64 3/4" (1645)	64" (1626)	58 1/8" (1476)	57" (1448)
66	66 3/4" (1695)	66" (1676)	60 1/8" (1527)	59" (1499)
72	72 3/4" (1848)	72" (1829)	66 1/8" (1680)	65" (1651)
78	78 3/4" (2000)	78" (1981)	72 1/8" (1832)	71" (1803)
80	80 3/4" (2051)	80" (2032)	74 1/8" (1883)	73" (1854)
84	84 3/4" (2153)	84" (2134)	78 1/8" (1984)	77" (1956)
96	96 3/4" (2457)	96" (2438)	90 1/8" (2289)	89" (2261)
108	108 3/4" (2762)	108" (2743)	102 1/8" (2594)	101" (2565)
120	120 3/4" (3067)	120" (3048)	114 1/8" (2899)	113" (2870)

Elevations Viewed from Exterior

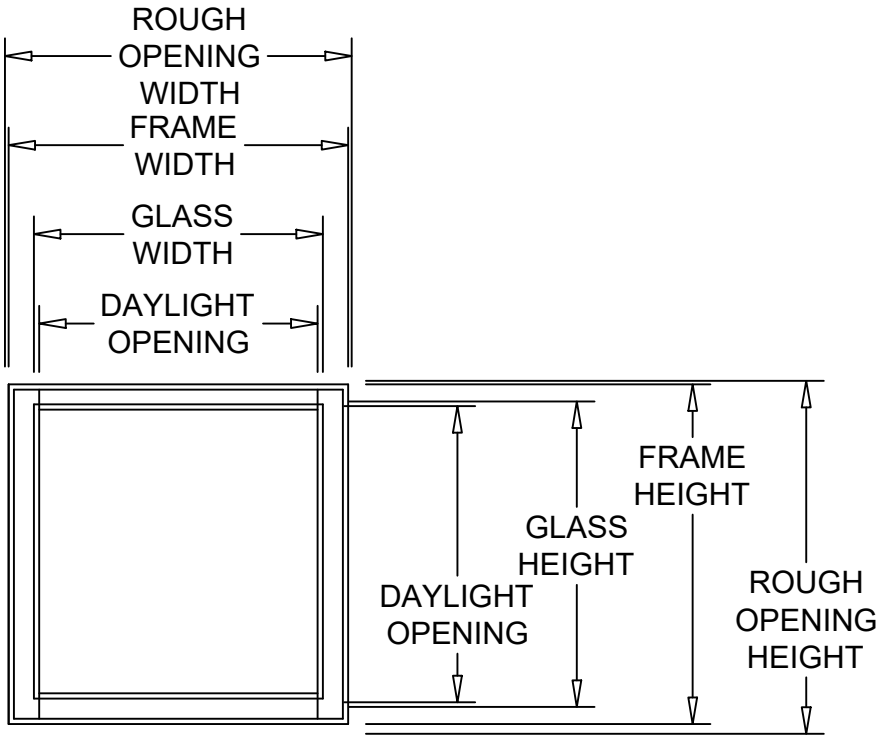

Example: C-SPCST-3636-1

1-Wide Width					Height				
CALL OUT WIDTH	ROUGH OPENING WIDTH	FRAME WIDTH	GLASS WIDTH	DAYLIGHT OPENING	CALL OUT HEIGHT	ROUGH OPENING HEIGHT	FRAME HEIGHT	GLASS HEIGHT	DAYLIGHT OPENING
12	12 3/4" (324)	12" (305)	6 1/8" (156)	5" (127)	12	12 3/4" (324)	12" (305)	6 1/8" (156)	5" (127)
18	18 3/4" (476)	18" (457)	12 1/8" (308)	11" (279)	18	18 3/4" (476)	18" (457)	12 1/8" (308)	11" (279)
24	24 3/4" (629)	24" (610)	18 1/8" (460)	17" (432)	24	24 3/4" (629)	24" (610)	18 1/8" (460)	17" (432)
30	30 3/4" (781)	30" (762)	24 1/8" (613)	23" (584)	30	30 3/4" (781)	30" (762)	24 1/8" (613)	23" (584)
36	36 3/4" (933)	36" (914)	30 1/8" (765)	29" (737)	36	36 3/4" (933)	36" (914)	30 1/8" (765)	29" (737)
36	36 3/4" (933)	36" (914)	30 1/8" (765)	29" (737)	42	42 3/4" (1086)	42" (1067)	36 1/8" (918)	35" (889)
42	42 3/4" (1086)	42" (1067)	36 1/8" (918)	35" (889)	48	48 3/4" (1238)	48" (1219)	42 1/8" (1070)	41" (1041)
48	48 3/4" (1238)	48" (1219)	42 1/8" (1070)	41" (1041)	54	54 3/4" (1391)	54" (1372)	48 1/8" (1222)	47" (1194)
54	54 3/4" (1391)	54" (1372)	48 1/8" (1222)	47" (1194)	60	60 3/4" (1543)	60" (1524)	54 1/8" (1375)	53" (1346)
60	60 3/4" (1543)	60" (1524)	54 1/8" (1375)	53" (1346)	66	66 3/4" (1695)	66" (1676)	60 1/8" (1527)	59" (1499)
72	72 3/4" (1848)	72" (1829)	66 1/8" (1680)	65" (1651)	72	72 3/4" (1848)	72" (1829)	66 1/8" (1680)	65" (1651)
84	84 3/4" (2153)	84" (2134)	78 1/8" (1984)	77" (1956)					
96	96 3/4" (2457)	96" (2438)	90 1/8" (2289)	89" (2261)					

Chart reflects standard sizes. Custom sizes available in 1/16" increments.
Note: For standard CAD layout elevations, visit www.SierraPacificWindows.com

Elevations Viewed from Exterior

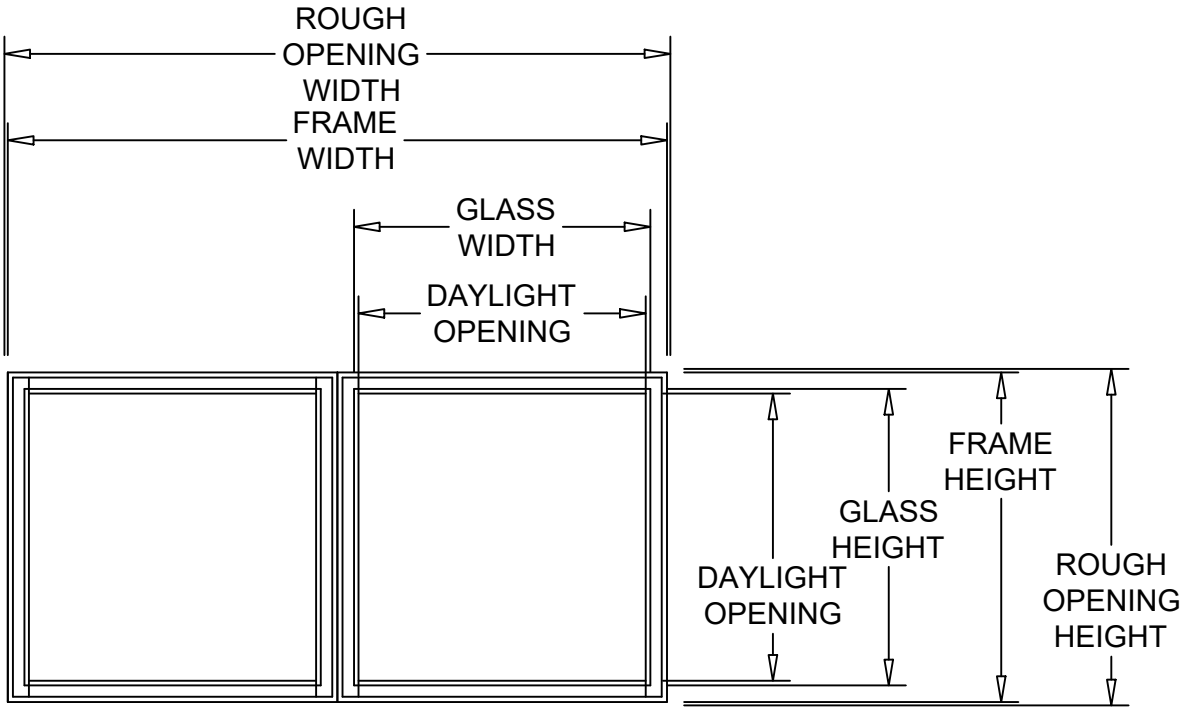

Example: C-SPCST-3636-2

2-Wide Width					Height				
CALL OUT WIDTH	ROUGH OPENING WIDTH	OVERALL FRAME WIDTH	GLASS WIDTH	DAYLIGHT OPENING	CALL OUT HEIGHT	ROUGH OPENING HEIGHT	FRAME HEIGHT	GLASS HEIGHT	DAYLIGHT OPENING
12	24 3/4" (629)	24" (610)	6 1/8" (156)	5" (127)	12	12 3/4" (324)	12" (305)	6 1/8" (156)	5" (127)
18	36 3/4" (933)	36" (914)	12 1/8" (308)	11" (279)	18	18 3/4" (476)	18" (457)	12 1/8" (308)	11" (279)
24	48 3/4" (1238)	48" (1219)	18 1/8" (460)	17" (432)	24	24 3/4" (629)	24" (610)	18 1/8" (460)	17" (432)
30	60 3/4" (1543)	60" (1524)	24 1/8" (613)	23" (584)	30	30 3/4" (781)	30" (762)	24 1/8" (613)	23" (584)
36	72 3/4" (1848)	72" (1829)	30 1/8" (765)	29" (737)	36	36 3/4" (933)	36" (914)	30 1/8" (765)	29" (737)
36	72 3/4" (1848)	72" (1829)	30 1/8" (765)	29" (737)	42	42 3/4" (1086)	42" (1067)	36 1/8" (918)	35" (889)
42	84 3/4" (2153)	84" (2134)	36 1/8" (918)	35" (889)	48	48 3/4" (1238)	48" (1219)	42 1/8" (1070)	41" (1041)
48	96 3/4" (2457)	96" (2438)	42 1/8" (1070)	41" (1041)	54	54 3/4" (1391)	54" (1372)	48 1/8" (1222)	47" (1194)
54	108 3/4" (2762)	108" (2743)	48 1/8" (1222)	47" (1194)	60	60 3/4" (1543)	60" (1524)	54 1/8" (1375)	53" (1346)
60	120 3/4" (3067)	120" (3048)	54 1/8" (1375)	53" (1346)	66	66 3/4" (1695)	66" (1676)	60 1/8" (1527)	59" (1499)
72	144 3/4" (3677)	144" (3658)	66 1/8" (1680)	65" (1651)	72	72 3/4" (1848)	72" (1829)	66 1/8" (1680)	65" (1651)

Chart reflects standard sizes. Custom sizes available in 1/16" increments.
Maximum Factory Mull: 144"x72" or 72"x144" or 18 United feet, or 72 sq. ft.
Note: For standard CAD layout elevations, visit www.SierraPacificWindows.com

Elevations Viewed from Exterior

Elevations

Clad Casement Wide Sash - Transom

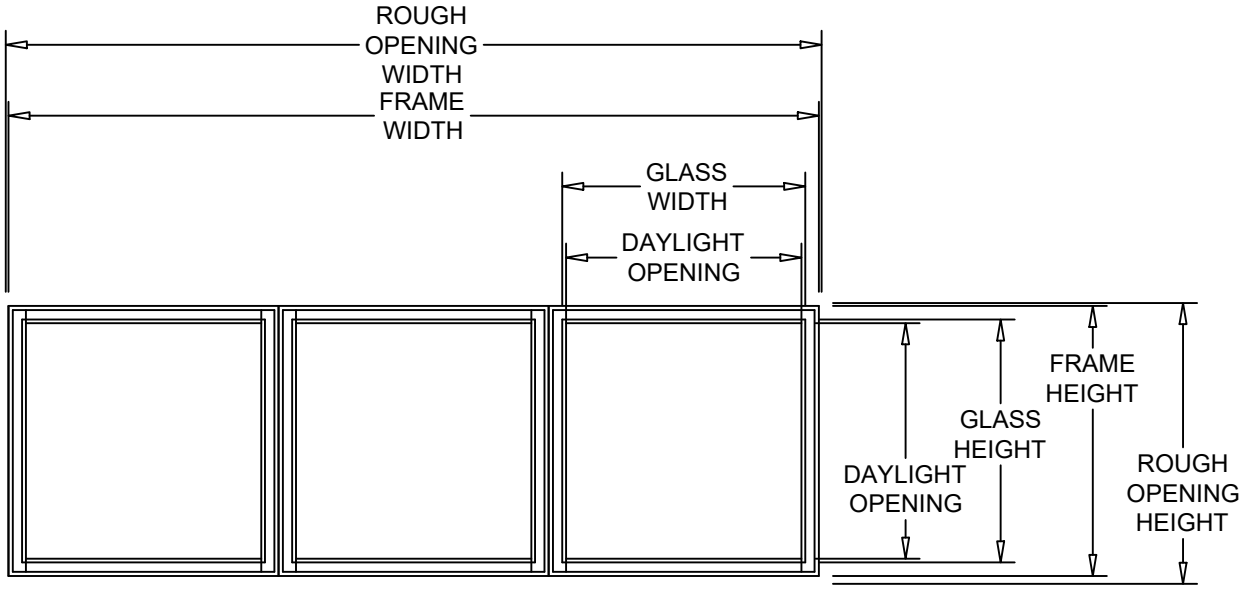

Example: C-SPCST-3636-3

3-Wide Width					Height				
CALL OUT WIDTH	ROUGH OPENING WIDTH	OVERALL FRAME WIDTH	GLASS WIDTH	DAYLIGHT OPENING	CALL OUT HEIGHT	ROUGH OPENING HEIGHT	FRAME HEIGHT	GLASS HEIGHT	DAYLIGHT OPENING
12	36 3/4" (933)	36" (914)	6 1/8" (156)	5" (127)	12	12 3/4" (324)	12" (305)	6 1/8" (156)	5" (127)
18	54 3/4" (1391)	54" (1372)	12 1/8" (308)	11" (279)	18	18 3/4" (476)	18" (457)	12 1/8" (308)	11" (279)
24	72 3/4" (1848)	72" (1829)	18 1/8" (460)	17" (432)	24	24 3/4" (629)	24" (610)	18 1/8" (460)	17" (432)
30	90 3/4" (2305)	90" (2286)	24 1/8" (613)	23" (584)	30	30 3/4" (781)	30" (762)	24 1/8" (613)	23" (584)
36	108 3/4" (2762)	108" (2743)	30 1/8" (765)	29" (737)	36	36 3/4" (933)	36" (914)	30 1/8" (765)	29" (737)
36	108 3/4" (2762)	108" (2743)	30 1/8" (765)	29" (737)	42	42 3/4" (1086)	42" (1067)	36 1/8" (918)	35" (889)
42	126 3/4" (3219)	126" (3200)	36 1/8" (918)	35" (889)	48	48 3/4" (1238)	48" (1219)	42 1/8" (1070)	41" (1041)
48	144 3/4" (3677)	144" (3658)	42 1/8" (1070)	41" (1041)	54	54 3/4" (1391)	54" (1372)	48 1/8" (1222)	47" (1194)
					60	60 3/4" (1543)	60" (1524)	54 1/8" (1375)	53" (1346)
					66	66 3/4" (1695)	66" (1676)	60 1/8" (1527)	59" (1499)
					72	72 3/4" (1848)	72" (1829)	66 1/8" (1680)	65" (1651)

Chart reflects standard sizes. Custom sizes available in 1/16" increments.
Maximum Factory Mull: 144"x72" or 72"x144" or 18 United feet, or 72 sq. ft.
Note: For standard CAD layout elevations, visit www.SierraPacificWindows.com

Elevations Viewed from Exterior

Elevations

Clad Casement Wide Sash - Transom

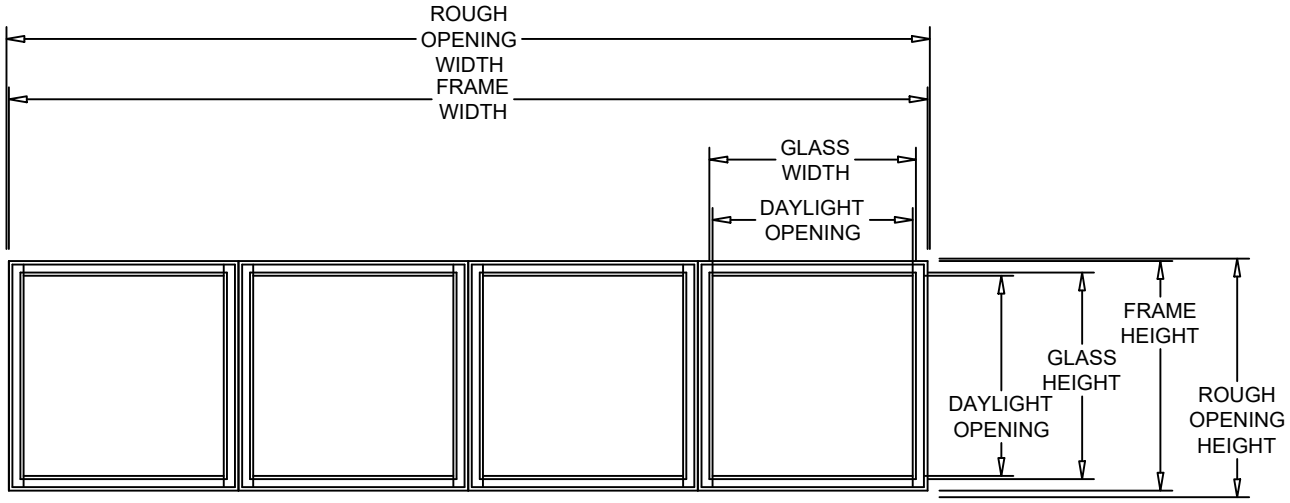

Example: C-SPCST-3636-4

4-Wide Width				
CALL OUT WIDTH	ROUGH OPENING WIDTH	OVERALL FRAME WIDTH	GLASS WIDTH	DAYLIGHT OPENING
12	48 3/4" (1238)	48" (305)	6 1/8" (156)	5" (127)
18	72 3/4" (1848)	72" (457)	12 1/8" (308)	11" (279)
24	96 3/4" (2457)	96" (610)	18 1/8" (460)	17" (432)
30	120 3/4" (3067)	120" (762)	24 1/8" (613)	23" (584)
36	144 3/4" (3677)	144" (914)	30 1/8" (765)	29" (737)

Chart reflects standard sizes. Custom sizes available in 1/16" increments.
Maximum Factory Mull: 144"x72" or 72"x144" or 18 United feet, or 72 sq. ft.
Note: For standard CAD layout elevations, visit www.SierraPacificWindows.com

Height				
CALL OUT HEIGHT	ROUGH OPENING HEIGHT	FRAME HEIGHT	GLASS HEIGHT	DAYLIGHT OPENING
12	12 3/4" (324)	12" (305)	6 1/8" (156)	5" (127)
18	18 3/4" (476)	18" (457)	12 1/8" (308)	11" (279)
24	24 3/4" (629)	24" (610)	18 1/8" (460)	17" (432)
30	30 3/4" (781)	30" (762)	24 1/8" (613)	23" (584)
36	36 3/4" (933)	36" (914)	30 1/8" (765)	29" (737)
42	42 3/4" (1086)	42" (1067)	36 1/8" (918)	35" (889)
48	48 3/4" (1238)	48" (1219)	42 1/8" (1070)	41" (1041)
54	54 3/4" (1391)	54" (1372)	48 1/8" (1222)	47" (1194)
60	60 3/4" (1543)	60" (1524)	54 1/8" (1375)	53" (1346)
66	66 3/4" (1695)	66" (1676)	60 1/8" (1527)	59" (1499)
72	72 3/4" (1848)	72" (1829)	66 1/8" (1680)	65" (1651)

Elevations Viewed from Exterior

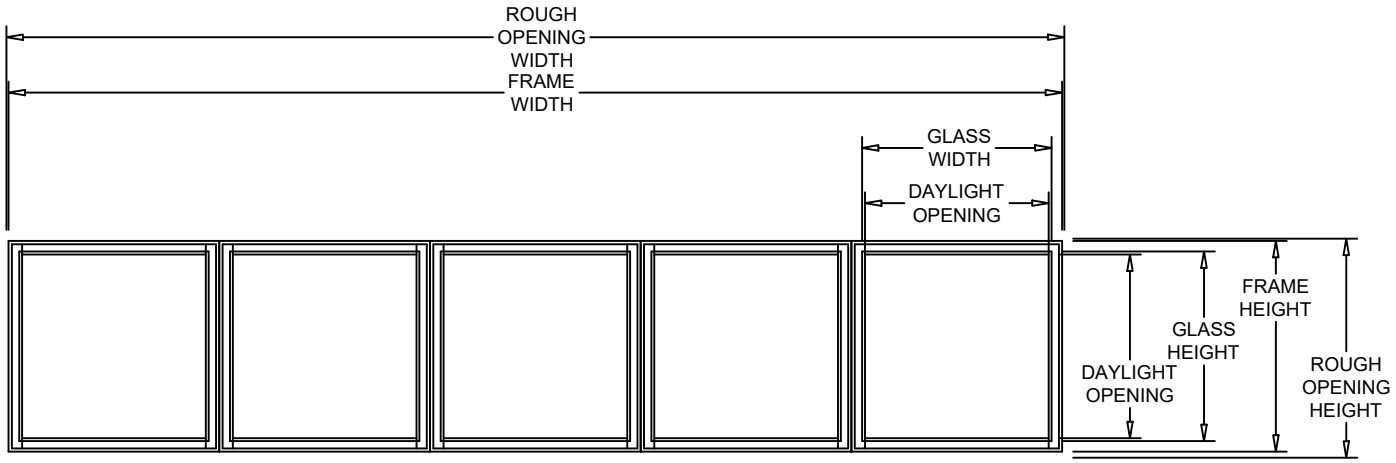

Example: C-SPCST - 3636-5

5-Wide Width				
CALL OUT WIDTH	ROUGH OPENING WIDTH	OVERALL FRAME WIDTH	GLASS WIDTH	DAYLIGHT OPENING
12	60 3/4" (1543)	60" (1524)	6 1/8" (156)	5" (127)
18	90 3/4" (2305)	90" (2286)	12 1/8" (308)	11" (279)
24	120 3/4" (3067)	120" (3048)	18 1/8" (460)	17" (432)

Height				
CALL OUT HEIGHT	ROUGH OPENING HEIGHT	FRAME HEIGHT	GLASS HEIGHT	DAYLIGHT OPENING
12	12 3/4" (324)	12" (305)	6 1/8" (156)	5" (127)
18	18 3/4" (476)	18" (457)	12 1/8" (308)	11" (279)
24	24 3/4" (629)	24" (610)	18 1/8" (460)	17" (432)
30	30 3/4" (781)	30" (762)	24 1/8" (613)	23" (584)
36	36 3/4" (933)	36" (914)	30 1/8" (765)	29" (737)
42	42 3/4" (1086)	42" (1067)	36 1/8" (918)	35" (889)
48	48 3/4" (1238)	48" (1219)	42 1/8" (1070)	41" (1041)
54	54 3/4" (1391)	54" (1372)	48 1/8" (1222)	47" (1194)
60	60 3/4" (1543)	60" (1524)	54 1/8" (1375)	53" (1346)
66	66 3/4" (1695)	66" (1676)	60 1/8" (1527)	59" (1499)
72	72 3/4" (1848)	72" (1829)	66 1/8" (1680)	65" (1651)

Chart reflects standard sizes. Custom sizes available in 1/16" increments.
Maximum Factory Mull: 144"x72" or 72"x144" or 18 United feet, or 72 sq. ft.
Note: For standard CAD layout elevations, visit www.SierraPacificWindows.com

Elevations Viewed from Exterior

Elevations

Clad Casement Narrow Sash - Operating

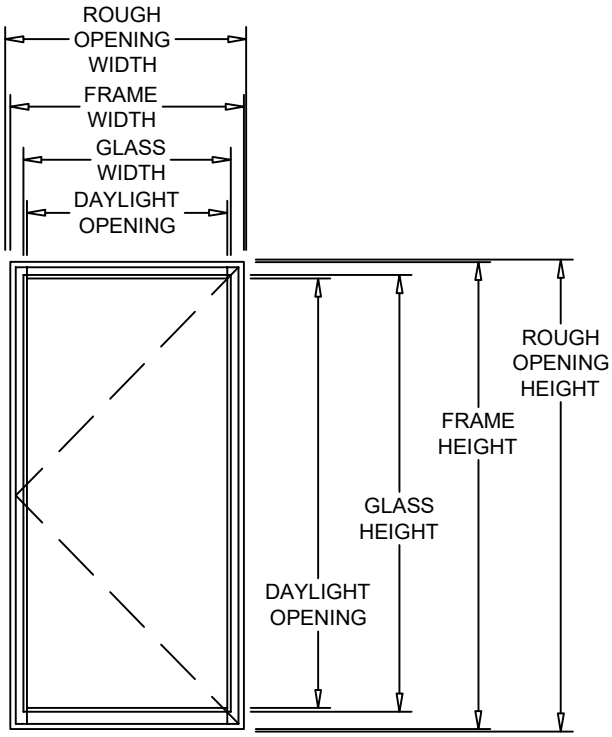

Example: C-SPCSE-2448-1

1-Wide Width				
CALL OUT WIDTH	ROUGH OPENING WIDTH	OVERALL FRAME WIDTH	GLASS WIDTH	DAYLIGHT OPENING
18	18 3/4" (476)	18" (457)	13 11/16" (348)	12 13/16" (325)
24	24 3/4" (629)	24" (610)	19 11/16" (500)	18 13/16" (478)
28	28 3/4" (730)	28" (711)	23 11/16" (602)	22 13/16" (579)
30	30 3/4" (781)	30" (762)	25 11/16" (652)	24 13/16" (630)
32	32 3/4" (832)	32" (813)	27 11/16" (703)	26 13/16" (681)
36	36 3/4" (933)	36" (914)	31 11/16" (805)	30 13/16" (783)
42	42 3/4" (1086)	42" (1067)	37 11/16" (957)	36 13/16" (935)
48	48 3/4" (1238)	48" (1219)	43 11/16" (1110)	42 13/16" (1087)

Height				
CALL OUT HEIGHT	ROUGH OPENING HEIGHT	OVERALL HEIGHT	GLASS HEIGHT	DAYLIGHT OPENING
18	18 3/4" (476)	18" (457)	13" (330)	12 1/8" (308)
20	20 3/4" (527)	20" (508)	15" (381)	14 1/8" (359)
24	24 3/4" (629)	24" (610)	19" (483)	18 1/8" (460)
28	28 3/4" (730)	28" (711)	23" (584)	22 1/8" (562)
30	30 3/4" (781)	30" (762)	25" (635)	24 1/8" (613)
32	32 3/4" (832)	32" (813)	27" (686)	26 1/8" (664)
36	36 3/4" (933)	36" (914)	31" (787)	30 1/8" (765)
40	40 3/4" (1035)	40" (1016)	35" (889)	34 1/8" (867)
42	42 3/4" (1086)	42" (1067)	37" (940)	36 1/8" (918)
48	48 3/4" (1238)	48" (1219)	43" (1092)	42 1/8" (1070)
54	54 3/4" (1391)	54" (1372)	49" (1245)	48 1/8" (1222)
60	60 3/4" (1543)	60" (1524)	55" (1397)	54 1/8" (1375)
64	64 3/4" (1645)	64" (1626)	59" (1499)	58 1/8" (1476)
66	66 3/4" (1695)	66" (1676)	61" (1549)	60 1/8" (1527)
72	72 3/4" (1848)	72" (1829)	67" (1702)	66 1/8" (1680)
78	78 3/4" (2000)	78" (1981)	73" (1854)	72 1/8" (1832)
80	80 3/4" (2051)	80" (2032)	75" (1905)	74 1/8" (1883)
84	84 3/4" (2153)	84" (2134)	79" (2007)	78 1/8" (1984)
96	96 3/4" (2457)	96" (2438)	91" (2311)	90 1/8" (2289)

Operations available: Left, Right or Stationary
Chart reflects standard sizes. Custom sizes available in 1/16" increments.
Note: For standard CAD layout elevations, visit www.SierraPacificWindows.com

Elevations Viewed from Exterior

Elevations

Clad Casement Narrow Sash - Operating

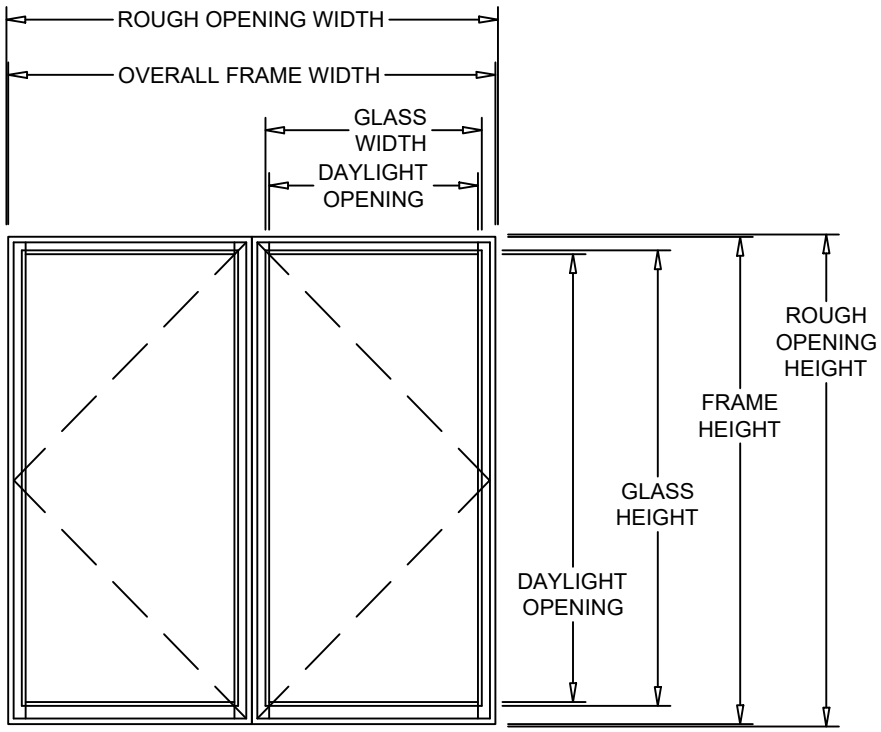

Example: C-SPCSE-2448-2

2-Wide Width					Height				
CALL OUT WIDTH	ROUGH OPENING WIDTH	OVERALL FRAME WIDTH	GLASS WIDTH	DAYLIGHT OPENING	CALL OUT HEIGHT	ROUGH OPENING HEIGHT	FRAME HEIGHT	GLASS HEIGHT	DAYLIGHT OPENING
18	36 3/4" (933)	36" (914)	13 11/16" (348)	12 13/16" (325)	18	18 3/4" (476)	18" (457)	13" (330)	12 1/8" (308)
24	48 3/4" (1238)	48" (1219)	19 11/16" (500)	18 13/16" (478)	20	20 3/4" (527)	20" (508)	15" (381)	14 1/8" (359)
28	56 3/4" (1441)	56" (1422)	23 11/16" (602)	22 13/16" (579)	24	24 3/4" (629)	24" (610)	19" (483)	18 1/8" (460)
30	60 3/4" (1543)	60" (1524)	25 11/16" (652)	24 13/16" (630)	28	28 3/4" (730)	28" (711)	23" (584)	22 1/8" (562)
32	64 3/4" (1645)	64" (1626)	27 11/16" (703)	26 13/16" (681)	30	30 3/4" (781)	30" (762)	25" (635)	24 1/8" (613)
36	72 3/4" (1848)	72" (1829)	31 11/16" (805)	30 13/16" (783)	32	32 3/4" (832)	32" (813)	27" (686)	26 1/8" (664)
42	84 3/4" (2153)	84" (2134)	37 11/16" (957)	36 13/16" (935)	36	36 3/4" (933)	36" (914)	31" (787)	30 1/8" (765)
48	96 3/4" (2457)	96" (2438)	43 11/16" (1110)	42 13/16" (1087)	40	40 3/4" (1035)	40" (1016)	35" (889)	34 1/8" (867)
					42	42 3/4" (1086)	42" (1067)	37" (940)	36 1/8" (918)
					48	48 3/4" (1238)	48" (1219)	43" (1092)	42 1/8" (1070)
					54	54 3/4" (1391)	54" (1372)	49" (1245)	48 1/8" (1222)
					60	60 3/4" (1543)	60" (1524)	55" (1397)	54 1/8" (1375)
					64	64 3/4" (1645)	64" (1626)	59" (1499)	58 1/8" (1476)
					66	66 3/4" (1695)	66" (1676)	61" (1549)	60 1/8" (1527)
					72	72 3/4" (1848)	72" (1829)	67" (1702)	66 1/8" (1680)
					78	78 3/4" (2000)	78" (1981)	73" (1854)	72 1/8" (1832)
					80	80 3/4" (2051)	80" (2032)	75" (1905)	74 1/8" (1883)
					84	84 3/4" (2153)	84" (2134)	79" (2007)	78 1/8" (1984)
					96	96 3/4" (2457)	96" (2438)	91" (2311)	90 1/8" (2289)

Operations available: Left, Right or Stationary
Chart reflects standard sizes. Custom sizes available in 1/16" increments.
Maximum Factory Mull: 144"x72" or 72"x144" or 18 United feet, or 72 sq. ft.
Note: For standard CAD layout elevations, visit www.SierraPacificWindows.com

Elevations Viewed from Exterior

Elevations

Clad Casement Narrow Sash - Operating

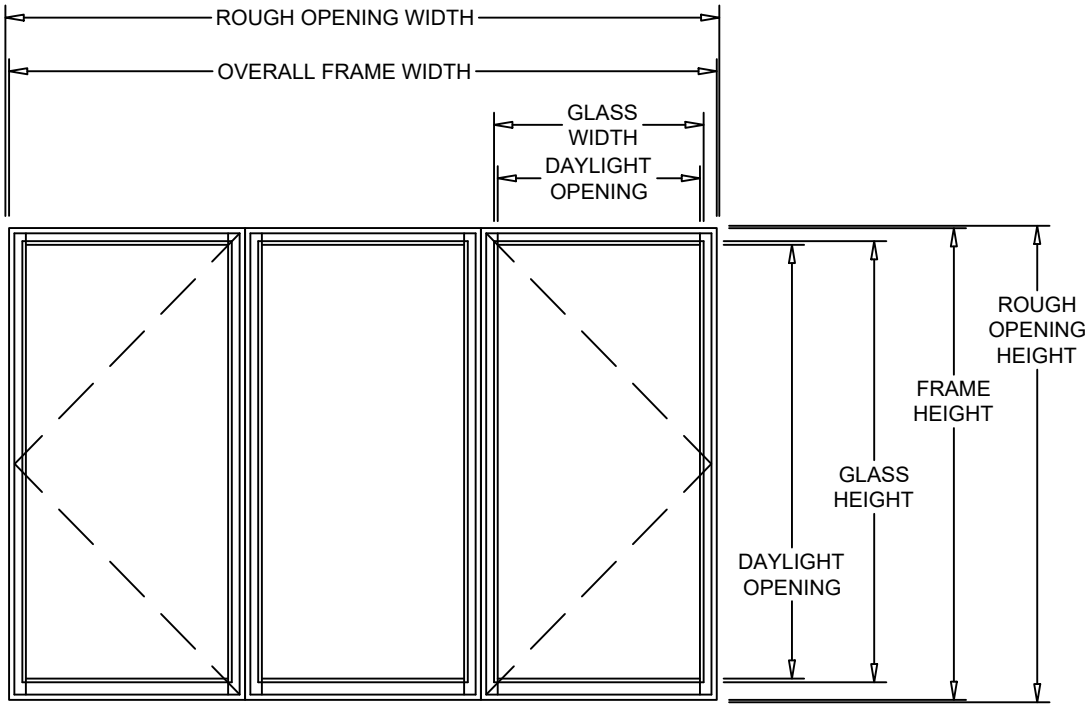

Example: C-SPCSE-2448-3

3-Wide Width				
CALL OUT WIDTH	ROUGH OPENING WIDTH	OVERALL FRAME WIDTH	GLASS WIDTH	DAYLIGHT OPENING
18	54 3/4" (1391)	54" (1372)	13 11/16" (348)	12 13/16" (325)
24	72 3/4" (1848)	72" (1829)	19 11/16" (500)	18 13/16" (478)
28	84 3/4" (2153)	84" (2134)	23 11/16" (602)	22 13/16" (579)
30	90 3/4" (2305)	90" (2286)	25 11/16" (652)	24 13/16" (630)
32	96 3/4" (2457)	96" (2438)	27 11/16" (703)	26 13/16" (681)
36	108 3/4" (2762)	108" (2743)	31 11/16" (805)	30 13/16" (783)
42	126 3/4" (3219)	126" (3200)	37 11/16" (957)	36 13/16" (935)
48	144 3/4" (3677)	144" (3658)	43 11/16" (1110)	42 13/16" (1087)

Operations available: Left, Right or Stationary
Chart reflects standard sizes. Custom sizes available in 1/16" increments.
Maximum Factory Mull: 144"x72" or 72"x144" or 18 United feet, or 72 sq. ft.
Note: For standard CAD layout elevations, visit www.SierraPacificWindows.com

Height				
CALL OUT HEIGHT	ROUGH OPENING HEIGHT	FRAME HEIGHT	GLASS HEIGHT	DAYLIGHT OPENING
18	18 3/4" (476)	18" (457)	13" (330)	12 1/8" (308)
20	20 3/4" (527)	20" (508)	15" (381)	14 1/8" (359)
24	24 3/4" (629)	24" (610)	19" (483)	18 1/8" (460)
28	28 3/4" (730)	28" (711)	23" (584)	22 1/8" (562)
30	30 3/4" (781)	30" (762)	25" (635)	24 1/8" (613)
32	32 3/4" (832)	32" (813)	27" (686)	26 1/8" (664)
36	36 3/4" (933)	36" (914)	31" (787)	30 1/8" (765)
40	40 3/4" (1035)	40" (1016)	35" (889)	34 1/8" (867)
42	42 3/4" (1086)	42" (1067)	37" (940)	36 1/8" (918)
48	48 3/4" (1238)	48" (1219)	43" (1092)	42 1/8" (1070)
54	54 3/4" (1391)	54" (1372)	49" (1245)	48 1/8" (1222)
60	60 3/4" (1543)	60" (1524)	55" (1397)	54 1/8" (1375)
64	64 3/4" (1645)	64" (1626)	59" (1499)	58 1/8" (1476)
66	66 3/4" (1695)	66" (1676)	61" (1549)	60 1/8" (1527)
72	72 3/4" (1848)	72" (1829)	67" (1702)	66 1/8" (1680)
78	78 3/4" (2000)	78" (1981)	73" (1854)	72 1/8" (1832)
80	80 3/4" (2051)	80" (2032)	75" (1905)	74 1/8" (1883)
84	84 3/4" (2153)	84" (2134)	79" (2007)	78 1/8" (1984)
96	96 3/4" (2457)	96" (2438)	91" (2311)	90 1/8" (2289)

Elevations Viewed from Exterior

Elevations

Clad Casement Narrow Sash - Operating

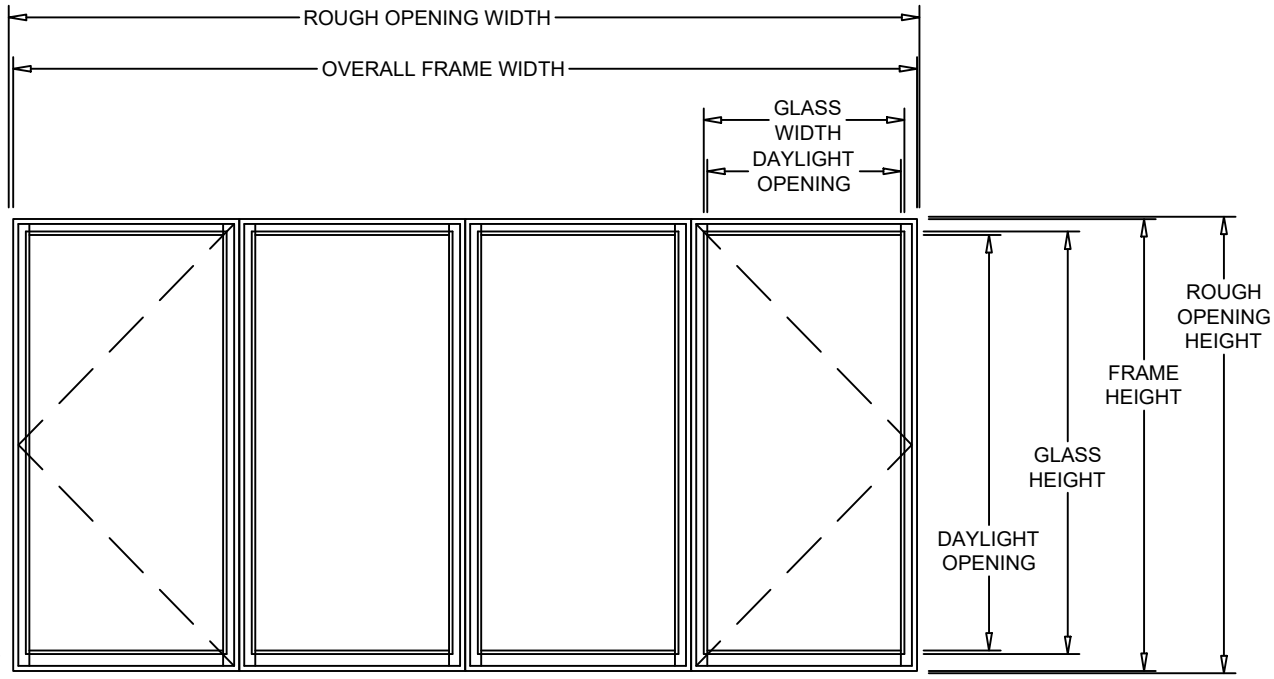

Example: C-SPCSE-2448-4

4-Wide Width					Height				
CALL OUT WIDTH	ROUGH OPENING WIDTH	OVERALL FRAME WIDTH	GLASS WIDTH	DAYLIGHT OPENING	CALL OUT HEIGHT	ROUGH OPENING HEIGHT	FRAME HEIGHT	GLASS HEIGHT	DAYLIGHT OPENING
18	72 3/4" (1848)	72" (1829)	13 11/16" (348)	12 13/16" (325)	18	18 3/4" (476)	18" (457)	13" (330)	12 1/8" (308)
24	96 3/4" (2457)	96" (2438)	19 11/16" (500)	18 13/16" (478)	20	20 3/4" (527)	20" (508)	15" (381)	14 1/8" (359)
28	112 3/4" (2864)	112" (2845)	23 11/16" (602)	22 13/16" (579)	24	24 3/4" (629)	24" (610)	19" (483)	18 1/8" (460)
30	120 3/4" (3067)	120" (3048)	25 11/16" (652)	24 13/16" (630)	28	28 3/4" (730)	28" (711)	23" (584)	22 1/8" (562)
32	128 3/4" (3270)	128" (3251)	27 11/16" (703)	26 13/16" (681)	30	30 3/4" (781)	30" (762)	25" (635)	24 1/8" (613)
36	144 3/4" (3677)	144" (3658)	31 11/16" (805)	30 13/16" (783)	32	32 3/4" (832)	32" (813)	27" (686)	26 1/8" (664)
					36	36 3/4" (933)	36" (914)	31" (787)	30 1/8" (765)
					40	40 3/4" (1035)	40" (1016)	35" (889)	34 1/8" (867)
					42	42 3/4" (1086)	42" (1067)	37" (940)	36 1/8" (918)
					48	48 3/4" (1238)	48" (1219)	43" (1092)	42 1/8" (1070)
					54	54 3/4" (1391)	54" (1372)	49" (1245)	48 1/8" (1222)
					60	60 3/4" (1543)	60" (1524)	55" (1397)	54 1/8" (1375)
					64	64 3/4" (1645)	64" (1626)	59" (1499)	58 1/8" (1476)
					66	66 3/4" (1695)	66" (1676)	61" (1549)	60 1/8" (1527)
					72	72 3/4" (1848)	72" (1829)	67" (1702)	66 1/8" (1680)
					78	78 3/4" (2000)	78" (1981)	73" (1854)	72 1/8" (1832)
					80	80 3/4" (2051)	80" (2032)	75" (1905)	74 1/8" (1883)
					84	84 3/4" (2153)	84" (2134)	79" (2007)	78 1/8" (1984)
					96	96 3/4" (2457)	96" (2438)	91" (2311)	90 1/8" (2289)

Operations available: Left, Right or Stationary
Chart reflects standard sizes. Custom sizes available in 1/16" increments.
Maximum Factory Mull: 144"x72" or 72"x144" or 18 United feet, or 72 sq. ft.
Note: For standard CAD layout elevations, visit www.SierraPacificWindows.com

Elevations Viewed from Exterior

Elevations

Clad Casement Narrow Sash - Operating

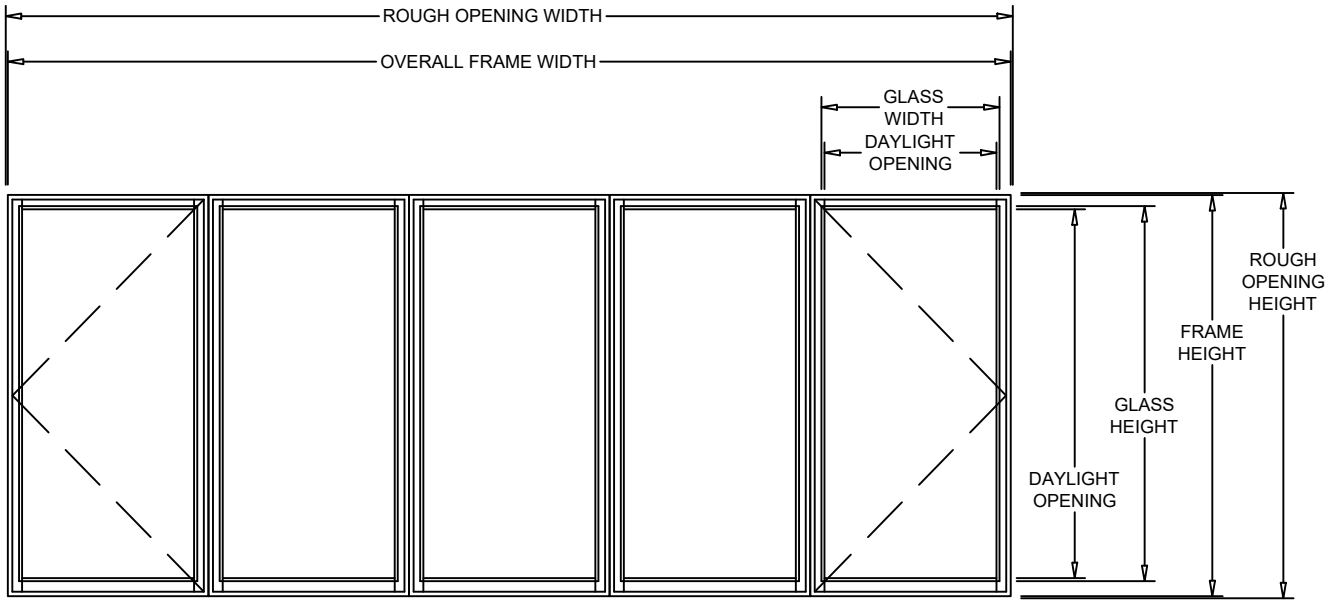

Example: C-SPCSE-2448-5

5-Wide Width				
CALL OUT WIDTH	ROUGH OPENING WIDTH	OVERALL FRAME WIDTH	GLASS WIDTH	DAYLIGHT OPENING
18	90 3/4" (2305)	90" (2286)	13 11/16" (348)	12 13/16" (325)
24	120 3/4" (3067)	120" (3048)	19 11/16" (500)	18 13/16" (478)
28	140 3/4" (3575)	140" (3556)	23 11/16" (602)	22 13/16" (579)

Operations available: Left, Right or Stationary
Chart reflects standard sizes. Custom sizes available in 1/16" increments.
Maximum Factory Mull: 144"x72" or 72"x144" or 18 United feet, or 72 sq. ft.
Note: For standard CAD layout elevations, visit www.SierraPacificWindows.com

Height				
CALL OUT HEIGHT	ROUGH OPENING HEIGHT	FRAME HEIGHT	GLASS HEIGHT	DAYLIGHT OPENING
18	18 3/4" (476)	18" (457)	13" (330)	12 1/8" (308)
20	20 3/4" (527)	20" (508)	15" (381)	14 1/8" (359)
24	24 3/4" (629)	24" (610)	19" (483)	18 1/8" (460)
28	28 3/4" (730)	28" (711)	23" (584)	22 1/8" (562)
30	30 3/4" (781)	30" (762)	25" (635)	24 1/8" (613)
32	32 3/4" (832)	32" (813)	27" (686)	26 1/8" (664)
36	36 3/4" (933)	36" (914)	31" (787)	30 1/8" (765)
40	40 3/4" (1035)	40" (1016)	35" (889)	34 1/8" (867)
42	42 3/4" (1086)	42" (1067)	37" (940)	36 1/8" (918)
48	48 3/4" (1238)	48" (1219)	43" (1092)	42 1/8" (1070)
54	54 3/4" (1391)	54" (1372)	49" (1245)	48 1/8" (1222)
60	60 3/4" (1543)	60" (1524)	55" (1397)	54 1/8" (1375)
64	64 3/4" (1645)	64" (1626)	59" (1499)	58 1/8" (1476)
66	66 3/4" (1695)	66" (1676)	61" (1549)	60 1/8" (1527)
72	72 3/4" (1848)	72" (1829)	67" (1702)	66 1/8" (1680)
78	78 3/4" (2000)	78" (1981)	73" (1854)	72 1/8" (1832)
80	80 3/4" (2051)	80" (2032)	75" (1905)	74 1/8" (1883)
84	84 3/4" (2153)	84" (2134)	79" (2007)	78 1/8" (1984)
96	96 3/4" (2457)	96" (2438)	91" (2311)	90 1/8" (2289)

Elevations Viewed from Exterior

Elevations

Clad Casement Narrow Sash - Picture

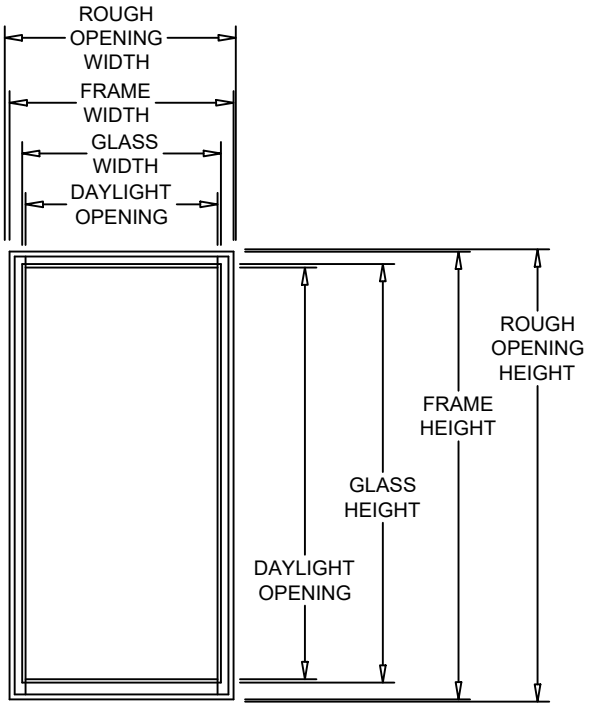

Example: C-SPCSE-2448-1

1-Wide Width				
CALL OUT WIDTH	ROUGH OPENING WIDTH	FRAME WIDTH	GLASS WIDTH	DAYLIGHT OPENING
18	18 3/4" (476)	18" (457)	13 11/16" (348)	12 13/16" (325)
24	24 3/4" (629)	24" (610)	19 11/16" (500)	18 13/16" (478)
28	28 3/4" (730)	28" (711)	23 11/16" (602)	22 13/16" (579)
30	30 3/4" (781)	30" (762)	25 11/16" (652)	24 13/16" (630)
32	32 3/4" (832)	32" (813)	27 11/16" (703)	26 13/16" (681)
36	36 3/4" (933)	36" (914)	31 11/16" (805)	30 13/16" (783)
42	42 3/4" (1086)	42" (1067)	37 11/16" (957)	36 13/16" (935)
48	48 3/4" (1238)	48" (1219)	43 11/16" (1110)	42 13/16" (1087)
54	54 3/4" (1391)	54" (1372)	49 11/16" (1262)	48 13/16" (1240)
60	60 3/4" (1543)	60" (1524)	55 11/16" (1414)	54 13/16" (1392)
66	66 3/4" (1695)	66" (1676)	61 11/16" (1567)	60 13/16" (1545)
72	72 3/4" (1848)	72" (1829)	67 11/16" (1719)	66 13/16" (1697)
76	76 3/4" (1949)	76" (1930)	71 11/16" (1821)	70 13/16" (1799)
80	80 3/4" (2051)	80" (2032)	75 11/16" (1922)	74 13/16" (1900)
84	84 3/4" (2153)	84" (2134)	79 11/16" (2024)	78 13/16" (2002)
96	96 3/4" (2457)	96" (2438)	91 11/16" (2329)	90 13/16" (2307)
108	108 3/4" (2762)	108" (2743)	103 11/16" (2634)	102 13/16" (2611)
120	120 3/4" (3067)	120" (3048)	115 11/16" (2938)	114 13/16" (2916)

Height				
CALL OUT HEIGHT	ROUGH OPENING HEIGHT	FRAME HEIGHT	GLASS HEIGHT	DAYLIGHT OPENING
18	18 3/4" (476)	18" (457)	13" (330)	12 1/8" (308)
20	20 3/4" (527)	20" (508)	15" (381)	14 1/8" (359)
24	24 3/4" (629)	24" (610)	19" (483)	18 1/8" (460)
28	28 3/4" (730)	28" (711)	23" (584)	22 1/8" (562)
30	30 3/4" (781)	30" (762)	25" (635)	24 1/8" (613)
32	32 3/4" (832)	32" (813)	27" (686)	26 1/8" (664)
36	36 3/4" (933)	36" (914)	31" (787)	30 1/8" (765)
40	40 3/4" (1035)	40" (1016)	35" (889)	34 1/8" (867)
42	42 3/4" (1086)	42" (1067)	37" (940)	36 1/8" (918)
48	48 3/4" (1238)	48" (1219)	43" (1092)	42 1/8" (1070)
54	54 3/4" (1391)	54" (1372)	49" (1245)	48 1/8" (1222)
60	60 3/4" (1543)	60" (1524)	55" (1397)	54 1/8" (1375)
64	64 3/4" (1645)	64" (1626)	59" (1499)	58 1/8" (1476)
66	66 3/4" (1695)	66" (1676)	61" (1549)	60 1/8" (1527)
72	72 3/4" (1848)	72" (1829)	67" (1702)	66 1/8" (1680)
78	78 3/4" (2000)	78" (1981)	73" (1854)	72 1/8" (1832)
80	80 3/4" (2051)	80" (2032)	75" (1905)	74 1/8" (1883)
84	84 3/4" (2153)	84" (2134)	79" (2007)	78 1/8" (1984)
96	96 3/4" (2457)	96" (2438)	91" (2311)	90 1/8" (2289)
108	108 3/4" (2762)	108" (2743)	103" (2616)	102 1/8" (2594)
120	120 3/4" (3067)	120" (3048)	115" (2921)	114 1/8" (2899)

Chart reflects standard sizes. Custom sizes available in 1/16" increments.
Note: For standard CAD layout elevations, visit www.SierraPacificWindows.com

Elevations Viewed from Exterior

Elevations

Clad Casement Narrow Sash - Picture

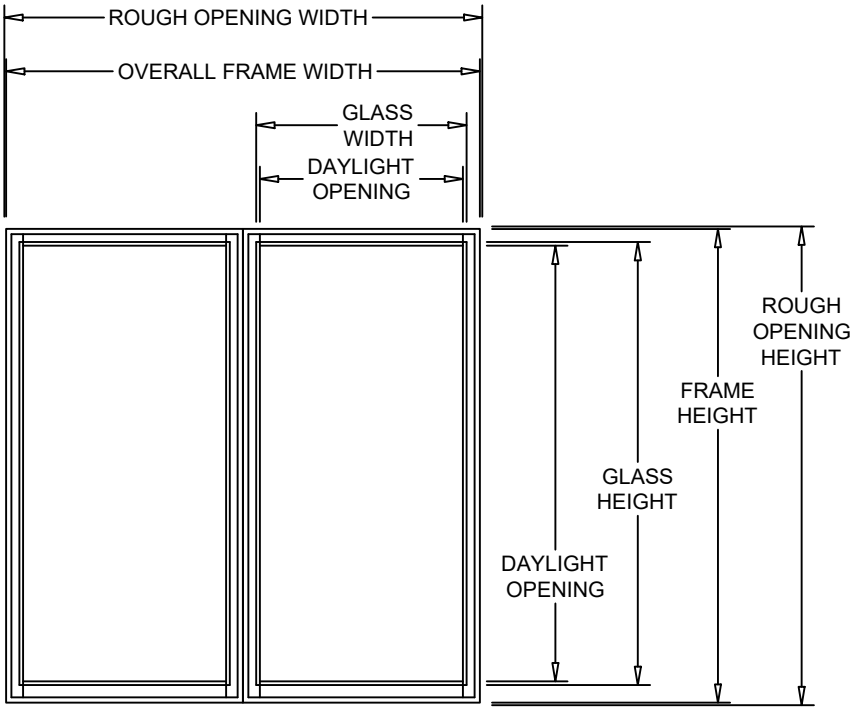

Example: C-SPCSE-2448-2

2-Wide Width				
CALL OUT WIDTH	ROUGH OPENING WIDTH	OVERALL FRAME WIDTH	GLASS WIDTH	DAYLIGHT OPENING
18	36 3/4 (933)	36" (914)	13 11/16" (348)	12 13/16" (325)
24	48 3/4 (1238)	48" (1219)	19 11/16" (500)	18 13/16" (478)
28	56 3/4 (1441)	56" (1422)	23 11/16" (602)	22 13/16" (579)
30	60 3/4 (1543)	60" (1524)	25 11/16" (652)	24 13/16" (630)
32	64 3/4 (1645)	64" (1626)	27 11/16" (703)	26 13/16" (681)
36	72 3/4 (1848)	72" (1829)	31 11/16" (805)	30 13/16" (783)
42	84 3/4 (2153)	84" (2134)	37 11/16" (957)	36 13/16" (935)
48	96 3/4 (2457)	96" (2438)	43 11/16" (1110)	42 13/16" (1087)
54	108 3/4 (2762)	108" (2743)	49 11/16" (1262)	48 13/16" (1240)
60	120 3/4 (3067)	120" (3048)	55 11/16" (1414)	54 13/16" (1392)
66	132 3/4 (3372)	132" (3353)	61 11/16" (1567)	60 13/16" (1545)
72	144 3/4 (3677)	144" (3658)	67 11/16" (1719)	66 13/16" (1697)

Height				
CALL OUT HEIGHT	ROUGH OPENING HEIGHT	FRAME HEIGHT	GLASS HEIGHT	DAYLIGHT OPENING
18	18 3/4" (476)	18" (457)	13" (330)	12 1/8" (308)
20	20 3/4" (527)	20" (508)	15" (381)	14 1/8" (359)
24	24 3/4" (629)	24" (610)	19" (483)	18 1/8" (460)
28	28 3/4" (730)	28" (711)	23" (584)	22 1/8" (562)
30	30 3/4" (781)	30" (762)	25" (635)	24 1/8" (613)
32	32 3/4" (832)	32" (813)	27" (686)	26 1/8" (664)
36	36 3/4" (933)	36" (914)	31" (787)	30 1/8" (765)
40	40 3/4" (1035)	40" (1016)	35" (889)	34 1/8" (867)
42	42 3/4" (1086)	42" (1067)	37" (940)	36 1/8" (918)
48	48 3/4" (1238)	48" (1219)	43" (1092)	42 1/8" (1070)
54	54 3/4" (1391)	54" (1372)	49" (1245)	48 1/8" (1222)
60	60 3/4" (1543)	60" (1524)	55" (1397)	54 1/8" (1375)
64	64 3/4" (1645)	64" (1626)	59" (1499)	58 1/8" (1476)
66	66 3/4" (1695)	66" (1676)	61" (1549)	60 1/8" (1527)
72	72 3/4" (1848)	72" (1829)	67" (1702)	66 1/8" (1680)
78	78 3/4" (2000)	78" (1981)	73" (1854)	72 1/8" (1832)
80	80 3/4" (2051)	80" (2032)	75" (1905)	74 1/8" (1883)
84	84 3/4" (2153)	84" (2134)	79" (2007)	78 1/8" (1984)
96	96 3/4" (2457)	96" (2438)	91" (2311)	90 1/8" (2289)
108	108 3/4" (2762)	108" (2743)	103" (2616)	102 1/8" (2594)
120	120 3/4" (3067)	120" (3048)	115" (2921)	114 1/8" (2899)

Chart reflects standard sizes. Custom sizes available in 1/16" increments.
Maximum Factory Mull: 144"x72" or 72"x144" or 18 United feet, or 72 sq. ft.
Note: For standard CAD layout elevations, visit www.SierraPacificWindows.com

Elevations Viewed from Exterior

Elevations

Clad Casement Narrow Sash - Picture

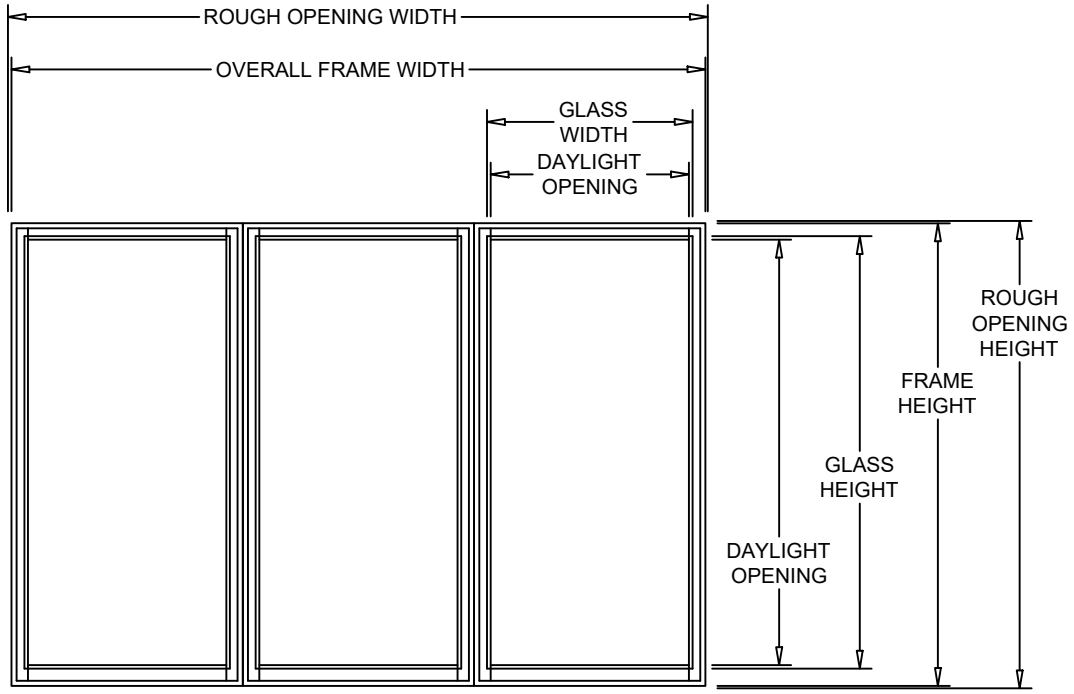

Example: C-SPCSE-2448-3

3-Wide Width				
CALL OUT WIDTH	ROUGH OPENING WIDTH	OVERALL FRAME WIDTH	GLASS WIDTH	DAYLIGHT OPENING
18	54 3/4" (1391)	54" (1372)	13 11/16" (348)	12 13/16" (325)
24	72 3/4" (1848)	72" (1829)	19 11/16" (500)	18 13/16" (478)
28	84 3/4" (2153)	84" (2134)	23 11/16" (602)	22 13/16" (579)
30	90 3/4" (2305)	90" (2286)	25 11/16" (652)	24 13/16" (630)
32	96 3/4" (2457)	96" (2438)	27 11/16" (703)	26 13/16" (681)
36	108 3/4" (2762)	108" (2743)	31 11/16" (805)	30 13/16" (783)
42	126 3/4" (3219)	126" (3200)	37 11/16" (957)	36 13/16" (935)
48	144 3/4" (3677)	144" (3658)	43 11/16" (1110)	42 13/16" (1087)

Height				
CALL OUT HEIGHT	ROUGH OPENING HEIGHT	FRAME HEIGHT	GLASS HEIGHT	DAYLIGHT OPENING
18	18 3/4" (476)	18" (457)	13" (330)	12 1/8" (308)
20	20 3/4" (527)	20" (508)	15" (381)	14 1/8" (359)
24	24 3/4" (629)	24" (610)	19" (483)	18 1/8" (460)
28	28 3/4" (730)	28" (711)	23" (584)	22 1/8" (562)
30	30 3/4" (781)	30" (762)	25" (635)	24 1/8" (613)
32	32 3/4" (832)	32" (813)	27" (686)	26 1/8" (664)
36	36 3/4" (933)	36" (914)	31" (787)	30 1/8" (765)
40	40 3/4" (1035)	40" (1016)	35" (889)	34 1/8" (867)
42	42 3/4" (1086)	42" (1067)	37" (940)	36 1/8" (918)
48	48 3/4" (1238)	48" (1219)	43" (1092)	42 1/8" (1070)
54	54 3/4" (1391)	54" (1372)	49" (1245)	48 1/8" (1222)
60	60 3/4" (1543)	60" (1524)	55" (1397)	54 1/8" (1375)
64	64 3/4" (1645)	64" (1626)	59" (1499)	58 1/8" (1476)
66	66 3/4" (1695)	66" (1676)	61" (1549)	60 1/8" (1527)
72	72 3/4" (1848)	72" (1829)	67" (1702)	66 1/8" (1680)
78	78 3/4" (2000)	78" (1981)	73" (1854)	72 1/8" (1832)
80	80 3/4" (2051)	80" (2032)	75" (1905)	74 1/8" (1883)
84	84 3/4" (2153)	84" (2134)	79" (2007)	78 1/8" (1984)
96	96 3/4" (2457)	96" (2438)	91" (2311)	90 1/8" (2289)
108	108 3/4" (2762)	108" (2743)	103" (2616)	102 1/8" (2594)
120	120 3/4" (3067)	120" (3048)	115" (2921)	114 1/8" (2899)

Chart reflects standard sizes. Custom sizes available in 1/16" increments.
Maximum Factory Mull: 144"x72" or 72"x144" or 18 United feet, or 72 sq. ft.
Note: For standard CAD layout elevations, visit www.SierraPacificWindows.com

Elevations Viewed from Exterior

Elevations

Clad Casement Narrow Sash - Picture

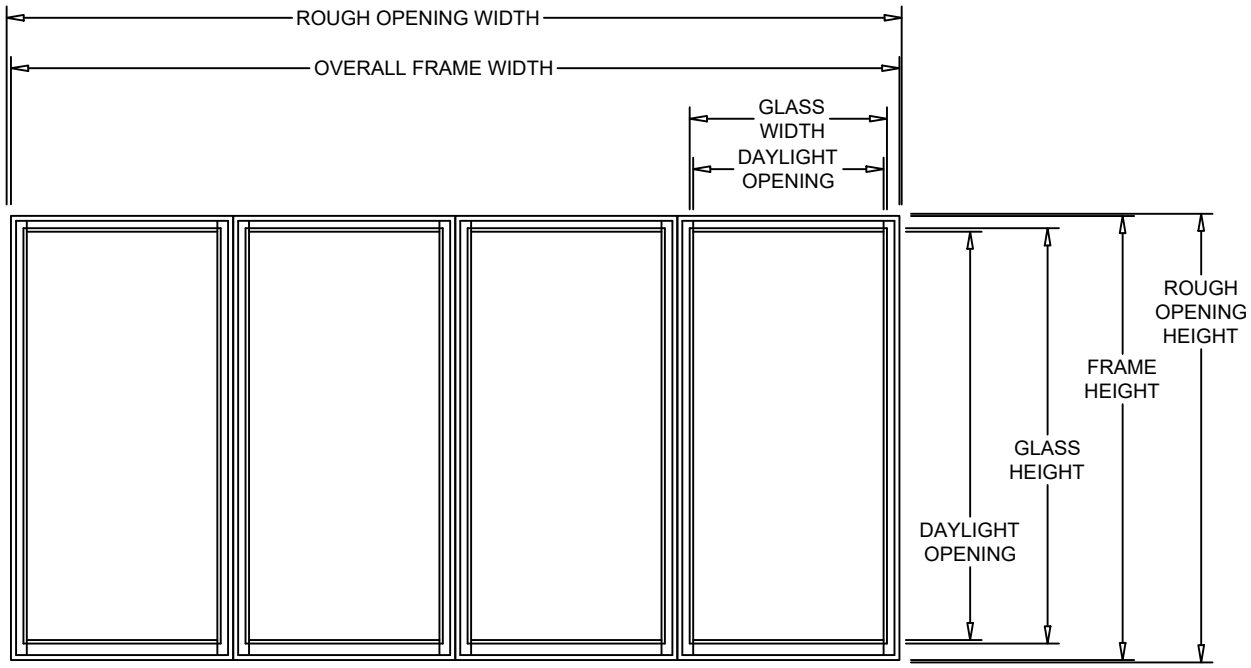

Example: C-SPCSE-2448-4

4-Wide Width					Height				
CALL OUT WIDTH	ROUGH OPENING WIDTH	OVERALL FRAME WIDTH	GLASS WIDTH	DAYLIGHT OPENING	CALL OUT HEIGHT	ROUGH OPENING HEIGHT	FRAME HEIGHT	GLASS HEIGHT	DAYLIGHT OPENING
18	72 3/4" (1848)	72" (1829)	13 11/16" (348)	12 13/16" (325)	18	18 3/4" (476)	18" (457)	13" (330)	12 1/8" (308)
24	96 3/4" (2457)	96" (2438)	19 11/16" (500)	18 13/16" (478)	20	20 3/4" (527)	20" (508)	15" (381)	14 1/8" (359)
28	112 3/4" (2864)	112" (2845)	23 11/16" (602)	22 13/16" (579)	24	24 3/4" (629)	24" (610)	19" (483)	18 1/8" (460)
30	120 3/4" (3067)	120" (3048)	25 11/16" (652)	24 13/16" (630)	28	28 3/4" (730)	28" (711)	23" (584)	22 1/8" (562)
32	128 3/4" (3270)	128" (3251)	27 11/16" (703)	26 13/16" (681)	30	30 3/4" (781)	30" (762)	25" (635)	24 1/8" (613)
36	144 3/4" (3677)	144" (3658)	31 11/16" (805)	30 13/16" (783)	32	32 3/4" (832)	32" (813)	27" (686)	26 1/8" (664)
					36	36 3/4" (933)	36" (914)	31" (787)	30 1/8" (765)
					40	40 3/4" (1035)	40" (1016)	35" (889)	34 1/8" (867)
					42	42 3/4" (1086)	42" (1067)	37" (940)	36 1/8" (918)
					48	48 3/4" (1238)	48" (1219)	43" (1092)	42 1/8" (1070)
					54	54 3/4" (1391)	54" (1372)	49" (1245)	48 1/8" (1222)
					60	60 3/4" (1543)	60" (1524)	55" (1397)	54 1/8" (1375)
					64	64 3/4" (1645)	64" (1626)	59" (1499)	58 1/8" (1476)
					66	66 3/4" (1695)	66" (1676)	61" (1549)	60 1/8" (1527)
					72	72 3/4" (1848)	72" (1829)	67" (1702)	66 1/8" (1680)
					78	78 3/4" (2000)	78" (1981)	73" (1854)	72 1/8" (1832)
					80	80 3/4" (2051)	80" (2032)	75" (1905)	74 1/8" (1883)
					84	84 3/4" (2153)	84" (2134)	79" (2007)	78 1/8" (1984)
					96	96 3/4" (2457)	96" (2438)	91" (2311)	90 1/8" (2289)
					108	108 3/4" (2762)	108" (2743)	103" (2616)	102 1/8" (2594)
					120	120 3/4" (3067)	120" (3048)	115" (2921)	114 1/8" (2899)

Chart reflects standard sizes. Custom sizes available in 1/16" increments.
Maximum Factory Mull: 144"x72" or 72"x144" or 18 United feet, or 72 sq. ft.
Note: For standard CAD layout elevations, visit www.SierraPacificWindows.com

Elevations Viewed from Exterior

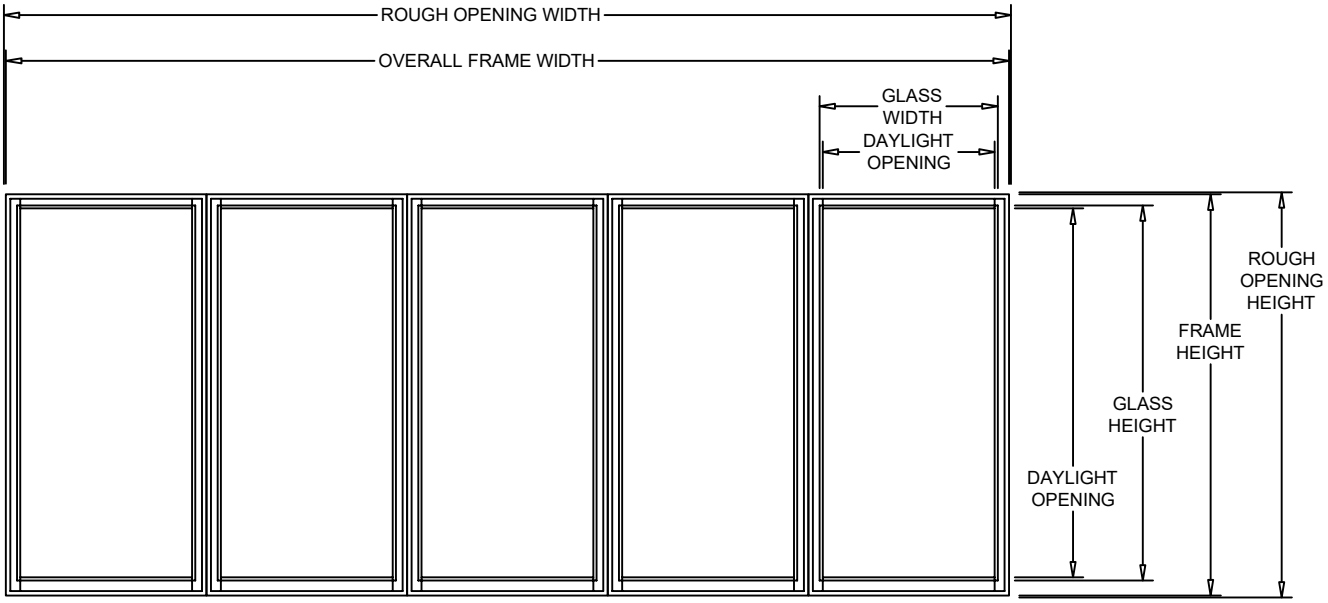

Example: C-SPCSE-2448-5

5-Wide Width				
CALL OUT WIDTH	ROUGH OPENING WIDTH	OVERALL FRAME WIDTH	GLASS WIDTH	DAYLIGHT OPENING
18	90 3/4" (2305)	90" (2286)	13 11/16" (348)	12 13/16" (325)
24	120 3/4" (3067)	120" (3048)	19 11/16" (500)	18 13/16" (478)
28	140 3/4" (3575)	140" (3556)	23 11/16" (602)	22 13/16" (579)

Chart reflects standard sizes. Custom sizes available in 1/16" increments.
Maximum Factory Mull: 144"x72" or 72"x144" or 18 United feet, or 72 sq. ft.
Note: For standard CAD layout elevations, visit www.SierraPacificWindows.com

Height				
CALL OUT HEIGHT	ROUGH OPENING HEIGHT	FRAME HEIGHT	GLASS HEIGHT	DAYLIGHT OPENING
18	18 3/4" (476)	18" (457)	13" (330)	12 1/8" (308)
20	20 3/4" (527)	20" (508)	15" (381)	14 1/8" (359)
24	24 3/4" (629)	24" (610)	19" (483)	18 1/8" (460)
28	28 3/4" (730)	28" (711)	23" (584)	22 1/8" (562)
30	30 3/4" (781)	30" (762)	25" (635)	24 1/8" (613)
32	32 3/4" (832)	32" (813)	27" (686)	26 1/8" (664)
36	36 3/4" (933)	36" (914)	31" (787)	30 1/8" (765)
40	40 3/4" (1035)	40" (1016)	35" (889)	34 1/8" (867)
42	42 3/4" (1086)	42" (1067)	37" (940)	36 1/8" (918)
48	48 3/4" (1238)	48" (1219)	43" (1092)	42 1/8" (1070)
54	54 3/4" (1391)	54" (1372)	49" (1245)	48 1/8" (1222)
60	60 3/4" (1543)	60" (1524)	55" (1397)	54 1/8" (1375)
64	64 3/4" (1645)	64" (1626)	59" (1499)	58 1/8" (1476)
66	66 3/4" (1695)	66" (1676)	61" (1549)	60 1/8" (1527)
72	72 3/4" (1848)	72" (1829)	67" (1702)	66 1/8" (1680)
78	78 3/4" (2000)	78" (1981)	73" (1854)	72 1/8" (1832)
80	80 3/4" (2051)	80" (2032)	75" (1905)	74 1/8" (1883)
84	84 3/4" (2153)	84" (2134)	79" (2007)	78 1/8" (1984)
96	96 3/4" (2457)	96" (2438)	91" (2311)	90 1/8" (2289)
108	108 3/4" (2762)	108" (2743)	103" (2616)	102 1/8" (2594)
120	120 3/4" (3067)	120" (3048)	115" (2921)	114 1/8" (2899)

Elevations Viewed from Exterior

Elevations

Clad Casement Narrow Sash - Transom

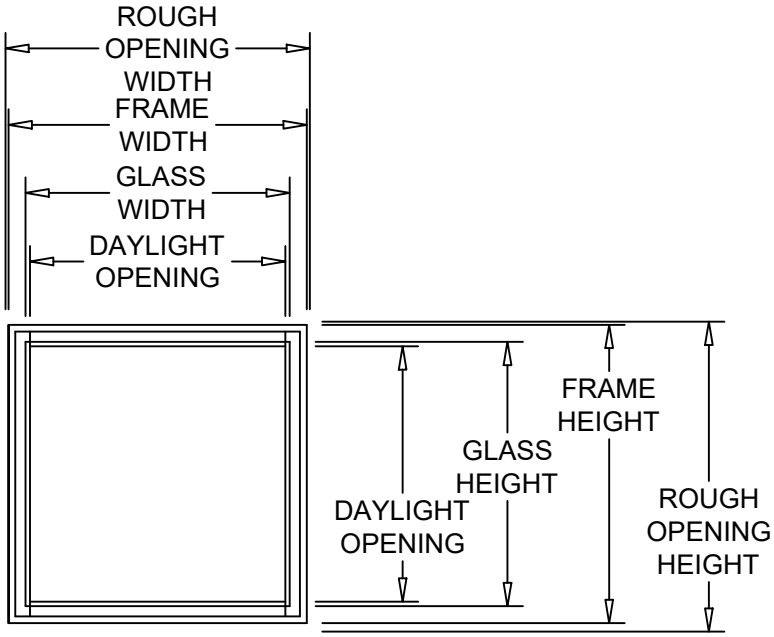

Example: C-SPCST00-3636-1

1-Wide Width					Height				
CALL OUT WIDTH	ROUGH OPENING WIDTH	FRAME WIDTH	GLASS WIDTH	DAYLIGHT OPENING	CALL OUT HEIGHT	ROUGH OPENING HEIGHT	FRAME HEIGHT	GLASS HEIGHT	DAYLIGHT OPENING
12	12 3/4" (324)	12" (305)	7 11/16" (195)	6 13/16" (173)	12	12 3/4" (324)	12" (305)	7 11/16" (195)	6 13/16" (173)
18	18 3/4" (476)	18" (457)	13 11/16" (348)	12 13/16" (325)	18	18 3/4" (476)	18" (457)	13 11/16" (348)	12 13/16" (325)
24	24 3/4" (629)	24" (610)	19 11/16" (500)	18 13/16" (478)	24	24 3/4" (629)	24" (610)	19 11/16" (500)	18 13/16" (478)
30	30 3/4" (781)	30" (762)	25 11/16" (652)	24 13/16" (630)	30	30 3/4" (781)	30" (762)	25 11/16" (652)	24 13/16" (630)
36	36 3/4" (933)	36" (914)	31 11/16" (805)	30 13/16" (783)	36	36 3/4" (933)	36" (914)	31 11/16" (805)	30 13/16" (783)
36	36 3/4" (933)	36" (914)	31 11/16" (805)	30 13/16" (783)	42	42 3/4" (1086)	42" (1067)	37 11/16" (957)	36 13/16" (935)
42	42 3/4" (1086)	42" (1067)	37 11/16" (957)	36 13/16" (935)	48	48 3/4" (1238)	48" (1219)	43 11/16" (1110)	42 13/16" (1087)
48	48 3/4" (1238)	48" (1219)	43 11/16" (1110)	42 13/16" (1087)	54	54 3/4" (1391)	54" (1372)	49 11/16" (1262)	48 13/16" (1240)
54	54 3/4" (1391)	54" (1372)	49 11/16" (1262)	48 13/16" (1240)	60	60 3/4" (1543)	60" (1524)	55 11/16" (1414)	54 13/16" (1392)
60	60 3/4" (1543)	60" (1524)	55 11/16" (1414)	54 13/16" (1392)	66	66 3/4" (1695)	66" (1676)	61 11/16" (1567)	60 13/16" (1545)
72	72 3/4" (1848)	72" (1829)	67 11/16" (1719)	66 13/16" (1697)	72	72 3/4" (1848)	72" (1829)	67 11/16" (1719)	66 13/16" (1697)
84	84 3/4" (2153)	84" (2134)	79 11/16" (2024)	78 13/16" (2002)					
96	96 3/4" (2457)	96" (2438)	91 11/16" (2329)	90 13/16" (2307)					

Chart reflects standard sizes. Custom sizes available in 1/16" increments.
Note: For standard CAD layout elevations, visit www.SierraPacificWindows.com

Elevations Viewed from Exterior

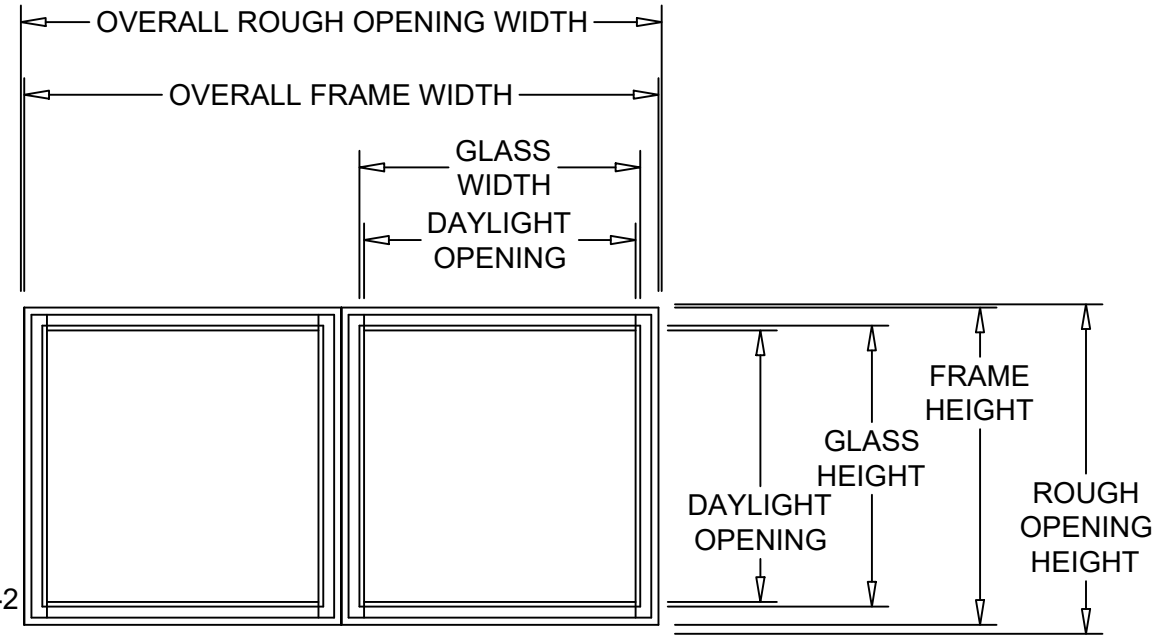

Example: C-SPCST00-3636-2

2-Wide Width					Height				
CALL OUT WIDTH	ROUGH OPENING WIDTH	OVERALL FRAME WIDTH	GLASS WIDTH	DAYLIGHT OPENING	CALL OUT HEIGHT	ROUGH OPENING HEIGHT	FRAME HEIGHT	GLASS HEIGHT	DAYLIGHT OPENING
12	24 3/4" (629)	24" (610)	7 11/16" (195)	6 13/16" (173)	12	12 3/4" (324)	12" (305)	7 11/16" (195)	6 13/16" (173)
18	36 3/4" (933)	36" (914)	13 11/16" (348)	12 13/16" (325)	18	18 3/4" (476)	18" (457)	13 11/16" (348)	12 13/16" (325)
24	48 3/4" (1238)	48" (1219)	19 11/16" (500)	18 13/16" (478)	24	24 3/4" (629)	24" (610)	19 11/16" (500)	18 13/16" (478)
30	60 3/4" (1543)	60" (1524)	25 11/16" (652)	24 13/16" (630)	30	30 3/4" (781)	30" (762)	25 11/16" (652)	24 13/16" (630)
36	72 3/4" (1848)	72" (1829)	31 11/16" (805)	30 13/16" (783)	36	36 3/4" (933)	36" (914)	31 11/16" (805)	30 13/16" (783)
36	72 3/4" (1848)	72" (1829)	31 11/16" (805)	30 13/16" (783)	42	42 3/4" (1086)	42" (1067)	37 11/16" (957)	36 13/16" (935)
42	84 3/4" (2153)	84" (2134)	37 11/16" (957)	36 13/16" (935)	48	48 3/4" (1238)	48" (1219)	43 11/16" (1110)	42 13/16" (1087)
48	96 3/4" (2457)	96" (2438)	43 11/16" (1110)	42 13/16" (1087)	54	54 3/4" (1391)	54" (1372)	49 11/16" (1262)	48 13/16" (1240)
54	108 3/4" (2762)	108" (2743)	49 11/16" (1262)	48 13/16" (1240)	60	60 3/4" (1543)	60" (1524)	55 11/16" (1414)	54 13/16" (1392)
60	120 3/4" (3067)	120" (3048)	55 11/16" (1414)	54 13/16" (1392)	66	66 3/4" (1695)	66" (1676)	61 11/16" (1567)	60 13/16" (1545)
72	144 3/4" (3677)	144" (3658)	67 11/16" (1719)	66 13/16" (1697)	72	72 3/4" (1848)	72" (1829)	67 11/16" (1719)	66 13/16" (1697)

Chart reflects standard sizes. Custom sizes available in 1/16" increments.
Maximum Factory Mull: 144"x72" or 72"x144" or 18 United feet, or 72 sq. ft.
Note: For standard CAD layout elevations, visit www.SierraPacificWindows.com

Elevations Viewed from Exterior

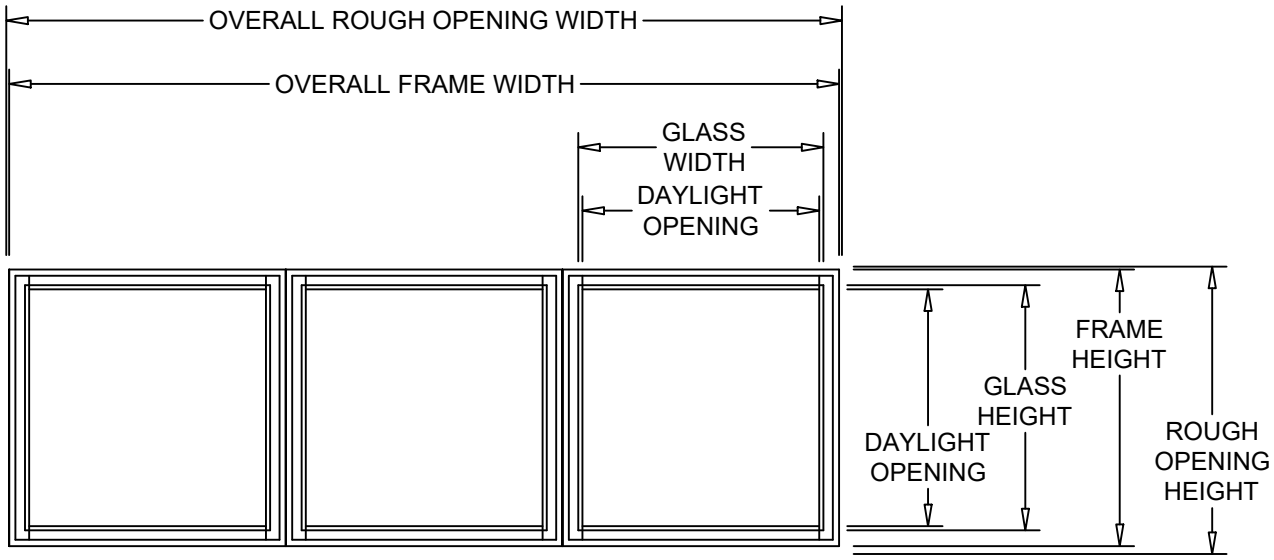

Example: C-SPCST00-3636-3

3-Wide Width					Height				
CALL OUT WIDTH	ROUGH OPENING WIDTH	OVERALL FRAME WIDTH	GLASS WIDTH	DAYLIGHT OPENING	CALL OUT HEIGHT	ROUGH OPENING HEIGHT	FRAME HEIGHT	GLASS HEIGHT	DAYLIGHT OPENING
12	36 3/4" (933)	36" (914)	7 11/16" (195)	6 13/16" (173)	12	12 3/4" (324)	12" (305)	7 11/16" (195)	6 13/16" (173)
18	54 3/4" (1391)	54" (1372)	13 11/16" (348)	12 13/16" (325)	18	18 3/4" (476)	18" (457)	13 11/16" (348)	12 13/16" (325)
24	72 3/4" (1848)	72" (1829)	19 11/16" (500)	18 13/16" (478)	24	24 3/4" (629)	24" (610)	19 11/16" (500)	18 13/16" (478)
30	90 3/4" (2305)	90" (2286)	25 11/16" (652)	24 13/16" (630)	30	30 3/4" (781)	30" (762)	25 11/16" (652)	24 13/16" (630)
36	108 3/4" (2762)	108" (2743)	31 11/16" (805)	30 13/16" (783)	36	36 3/4" (933)	36" (914)	31 11/16" (805)	30 13/16" (783)
36	108 3/4" (2762)	108" (2743)	31 11/16" (805)	30 13/16" (783)	42	42 3/4" (1086)	42" (1067)	37 11/16" (957)	36 13/16" (935)
42	126 3/4" (3219)	126" (3200)	37 11/16" (957)	36 13/16" (935)	48	48 3/4" (1238)	48" (1219)	43 11/16" (1110)	42 13/16" (1087)
48	144 3/4" (3677)	144" (3658)	43 11/16" (1110)	42 13/16" (1087)	54	54 3/4" (1391)	54" (1372)	49 11/16" (1262)	48 13/16" (1240)
					60	60 3/4" (1543)	60" (1524)	55 11/16" (1414)	54 13/16" (1392)
					66	66 3/4" (1695)	66" (1676)	61 11/16" (1567)	60 13/16" (1545)
					72	72 3/4" (1848)	72" (1829)	67 11/16" (1719)	66 13/16" (1697)

Chart reflects standard sizes. Custom sizes available in 1/16" increments.
Maximum Factory Mull: 144"x72" or 72"x144" or 18 United feet, or 72 sq. ft.
Note: For standard CAD layout elevations, visit www.SierraPacificWindows.com

Elevations Viewed from Exterior

Example: C-SPCST00-3636-4

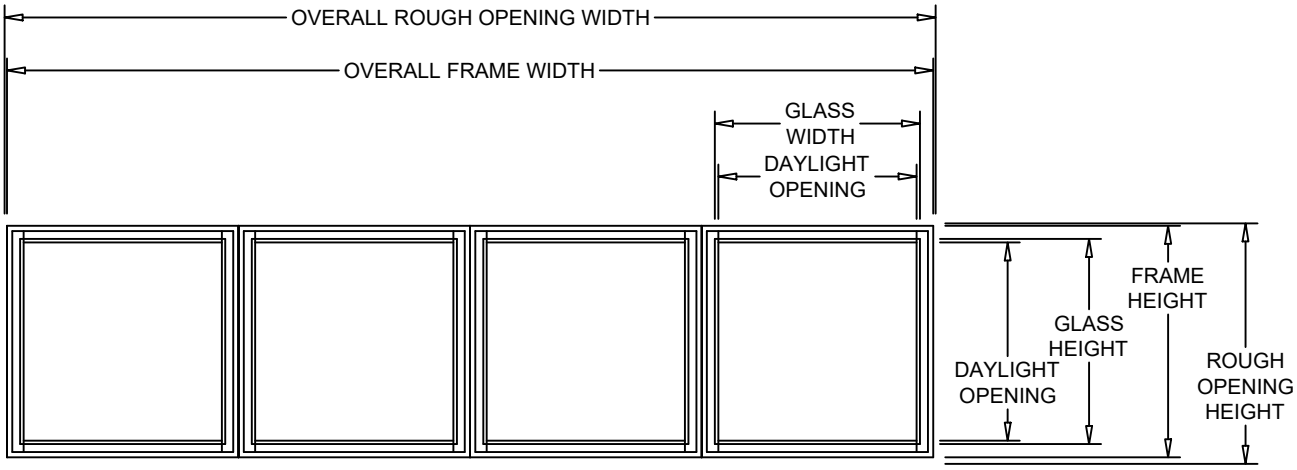

4-Wide Width					Height				
CALL OUT WIDTH	ROUGH OPENING WIDTH	OVERALL FRAME WIDTH	GLASS WIDTH	DAYLIGHT OPENING	CALL OUT HEIGHT	ROUGH OPENING HEIGHT	FRAME HEIGHT	GLASS HEIGHT	DAYLIGHT OPENING
12	48 3/4" (1238)	48" (305)	7 11/16" (195)	6 13/16" (173)	12	12 3/4" (324)	12" (305)	7 11/16" (195)	6 13/16" (173)
18	72 3/4" (1848)	72" (457)	13 11/16" (348)	12 13/16" (325)	18	18 3/4" (476)	18" (457)	13 11/16" (348)	12 13/16" (325)
24	96 3/4" (2457)	96" (610)	19 11/16" (500)	18 13/16" (478)	24	24 3/4" (629)	24" (610)	19 11/16" (500)	18 13/16" (478)
30	120 3/4" (3067)	120" (762)	25 11/16" (652)	24 13/16" (630)	30	30 3/4" (781)	30" (762)	25 11/16" (652)	24 13/16" (630)
36	144 3/4" (3677)	144" (914)	31 11/16" (805)	30 13/16" (783)	36	36 3/4" (933)	36" (914)	31 11/16" (805)	30 13/16" (783)
					42	42 3/4" (1086)	42" (1067)	37 11/16" (957)	36 13/16" (935)
					48	48 3/4" (1238)	48" (1219)	43 11/16" (1110)	42 13/16" (1087)
					54	54 3/4" (1391)	54" (1372)	49 11/16" (1262)	48 13/16" (1240)
					60	60 3/4" (1543)	60" (1524)	55 11/16" (1414)	54 13/16" (1392)
					66	66 3/4" (1695)	66" (1676)	61 11/16" (1567)	60 13/16" (1545)
					72	72 3/4" (1848)	72" (1829)	67 11/16" (1719)	66 13/16" (1697)

Chart reflects standard sizes. Custom sizes available in 1/16" increments.
Maximum Factory Mull: 144"x72" or 72"x144" or 18 United feet, or 72 sq. ft.
Note: For standard CAD layout elevations, visit www.SierraPacificWindows.com

Elevations Viewed from Exterior

Elevations

Clad Casement Narrow Sash - Transom

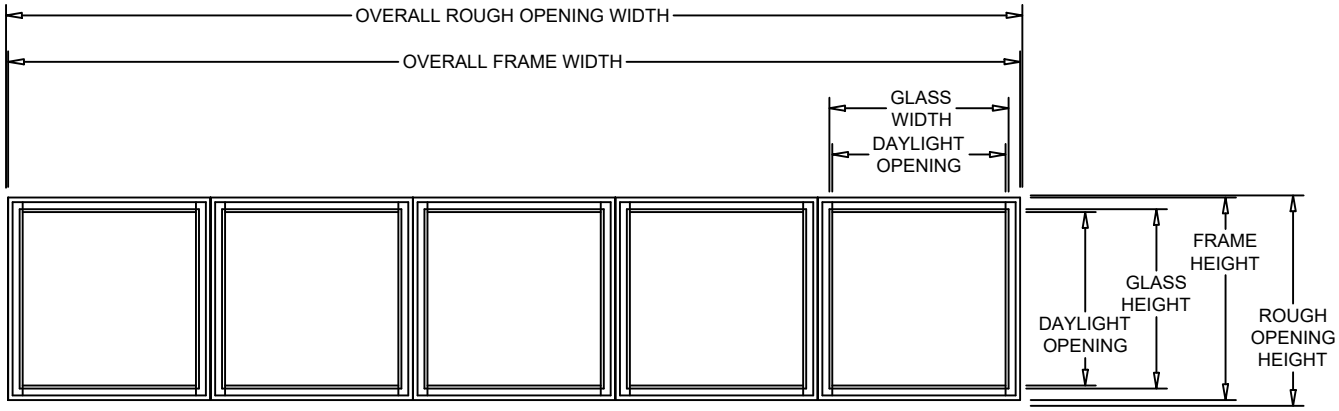

Example: C-SPCST00-3636-5

5-Wide Width				
CALL OUT WIDTH	ROUGH OPENING WIDTH	OVERALL FRAME WIDTH	GLASS WIDTH	DAYLIGHT OPENING
12	60 3/4" (1543)	60" (1524)	7 11/16" (195)	6 13/16" (173)
18	90 3/4" (2305)	90" (2286)	13 11/16" (348)	12 13/16" (325)
24	120 3/4" (3067)	120" (3048)	19 11/16" (500)	18 13/16" (478)

Height				
CALL OUT HEIGHT	ROUGH OPENING HEIGHT	FRAME HEIGHT	GLASS HEIGHT	DAYLIGHT OPENING
12	12 3/4" (324)	12" (305)	7 11/16" (195)	6 13/16" (173)
18	18 3/4" (476)	18" (457)	13 11/16" (348)	12 13/16" (325)
24	24 3/4" (629)	24" (610)	19 11/16" (500)	18 13/16" (478)
30	30 3/4" (781)	30" (762)	25 11/16" (652)	24 13/16" (630)
36	36 3/4" (933)	36" (914)	31 11/16" (805)	30 13/16" (783)
42	42 3/4" (1086)	42" (1067)	37 11/16" (957)	36 13/16" (935)
48	48 3/4" (1238)	48" (1219)	43 11/16" (1110)	42 13/16" (1087)
54	54 3/4" (1391)	54" (1372)	49 11/16" (1262)	48 13/16" (1240)
60	60 3/4" (1543)	60" (1524)	55 11/16" (1414)	54 13/16" (1392)
66	66 3/4" (1695)	66" (1676)	61 11/16" (1567)	60 13/16" (1545)
72	72 3/4" (1848)	72" (1829)	67 11/16" (1719)	66 13/16" (1697)

Chart reflects standard sizes. Custom sizes available in 1/16" increments.
Maximum Factory Mull: 144"x72" or 72"x144" or 18 United feet, or 72 sq. ft.
Note: For standard CAD layout elevations, visit www.SierraPacificWindows.com

Elevations Viewed from Exterior

SIERRA PACIFIC WINDOWS

Section 5

Section Views

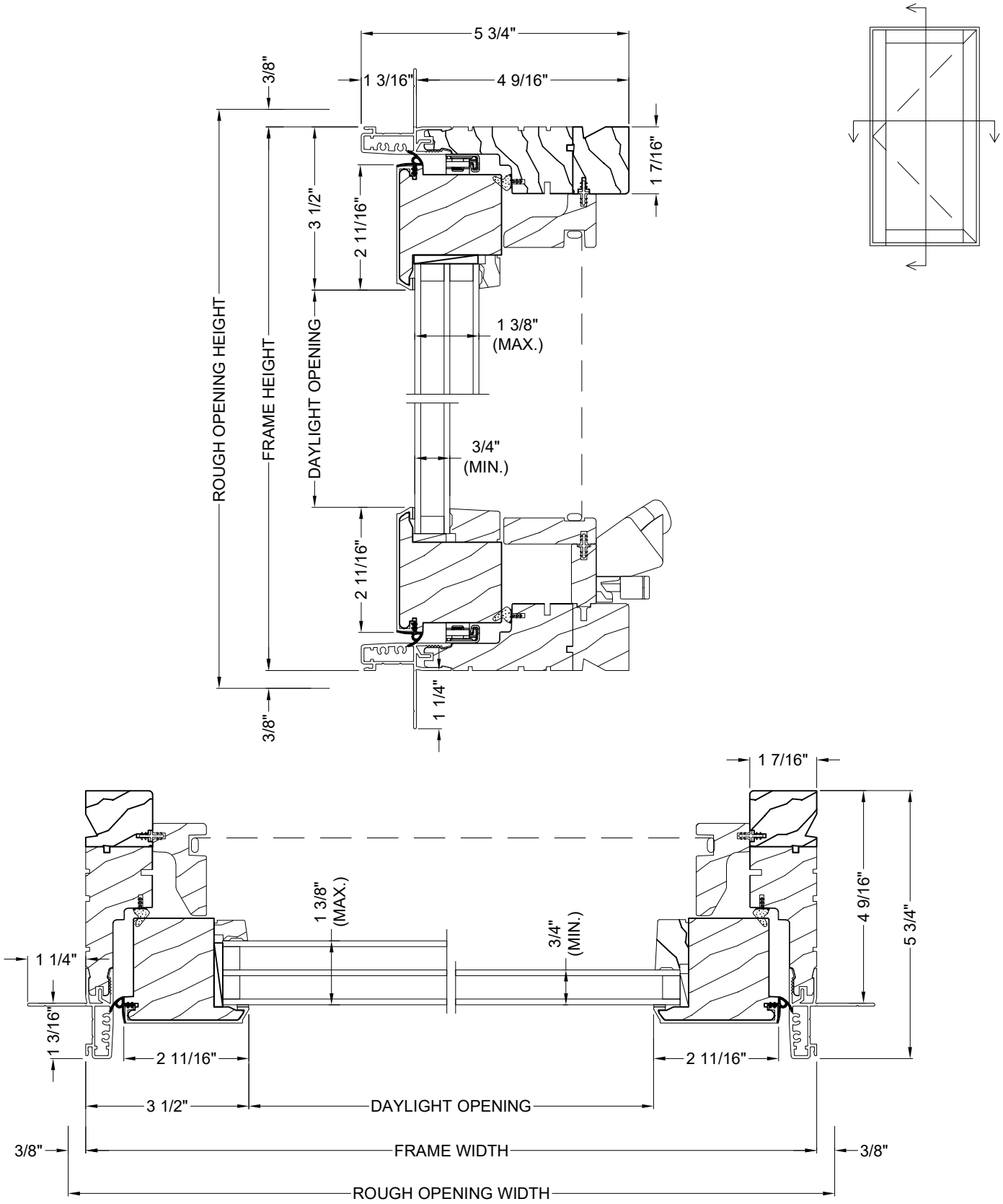
5 3/4"
1 3/16"
4 9/16"
3/8"
1 7/16"
3 1/2"
2 11/16"
ROUGH OPENING HEIGHT
FRAME HEIGHT
DAYLIGHT OPENING
1 3/8"
(MAX.)
3/4"
(MIN.)
2 11/16"
1 1/4"
3/8"
1 7/16"
1 3/8"
(MAX.)
3/4"
(MIN.)
4 9/16"
5 3/4"
1 1/4"
1 3/16"
2 11/16"
2 11/16"
3 1/2"
DAYLIGHT OPENING
3/8"
FRAME WIDTH
3/8"
ROUGH OPENING WIDTH

Clad Casement Wide Sash - Operating
w/Retractable Screen

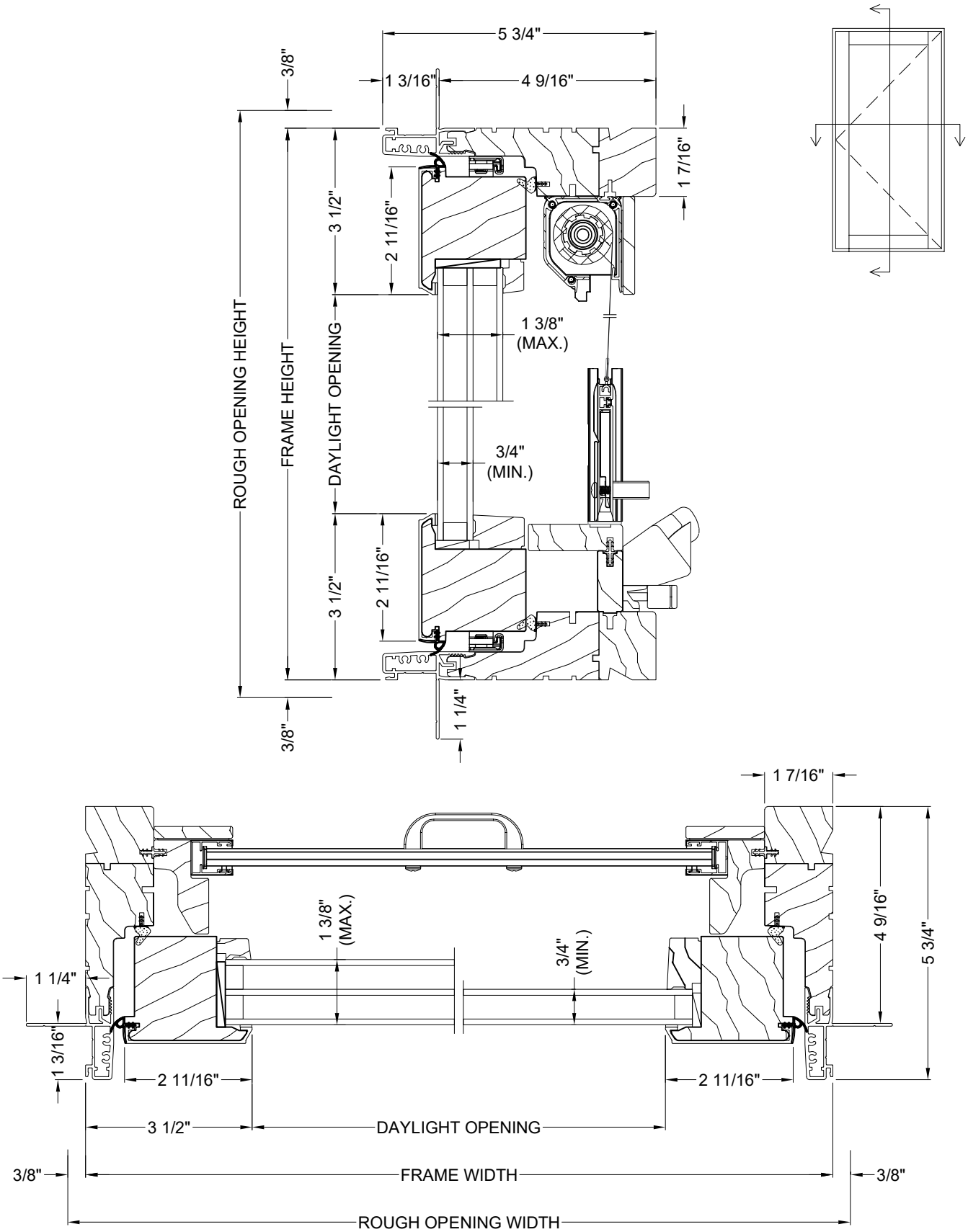

Clad Casement Wide Sash - Picture

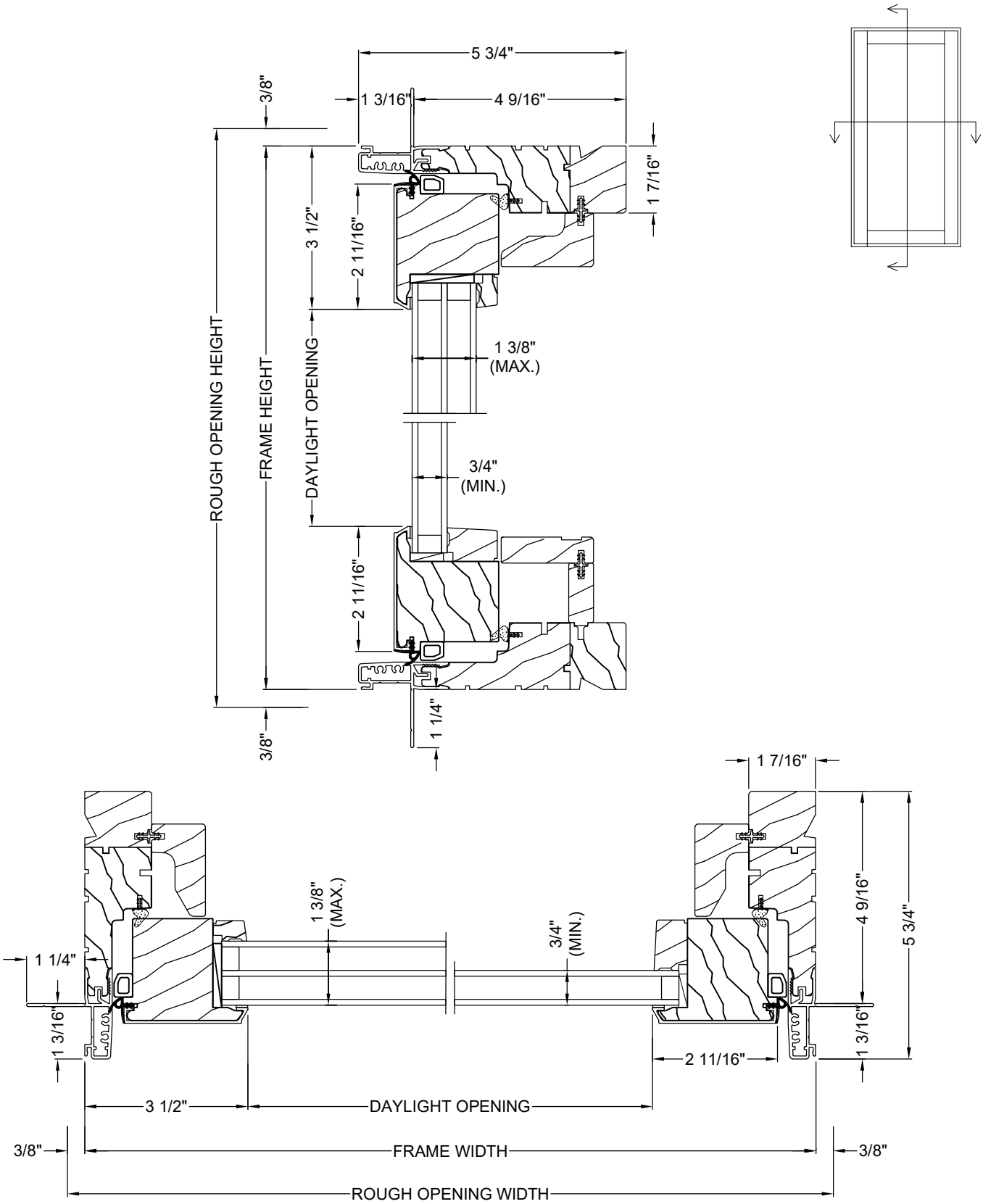

Section Views

Clad Casement Wide Sash - Transom

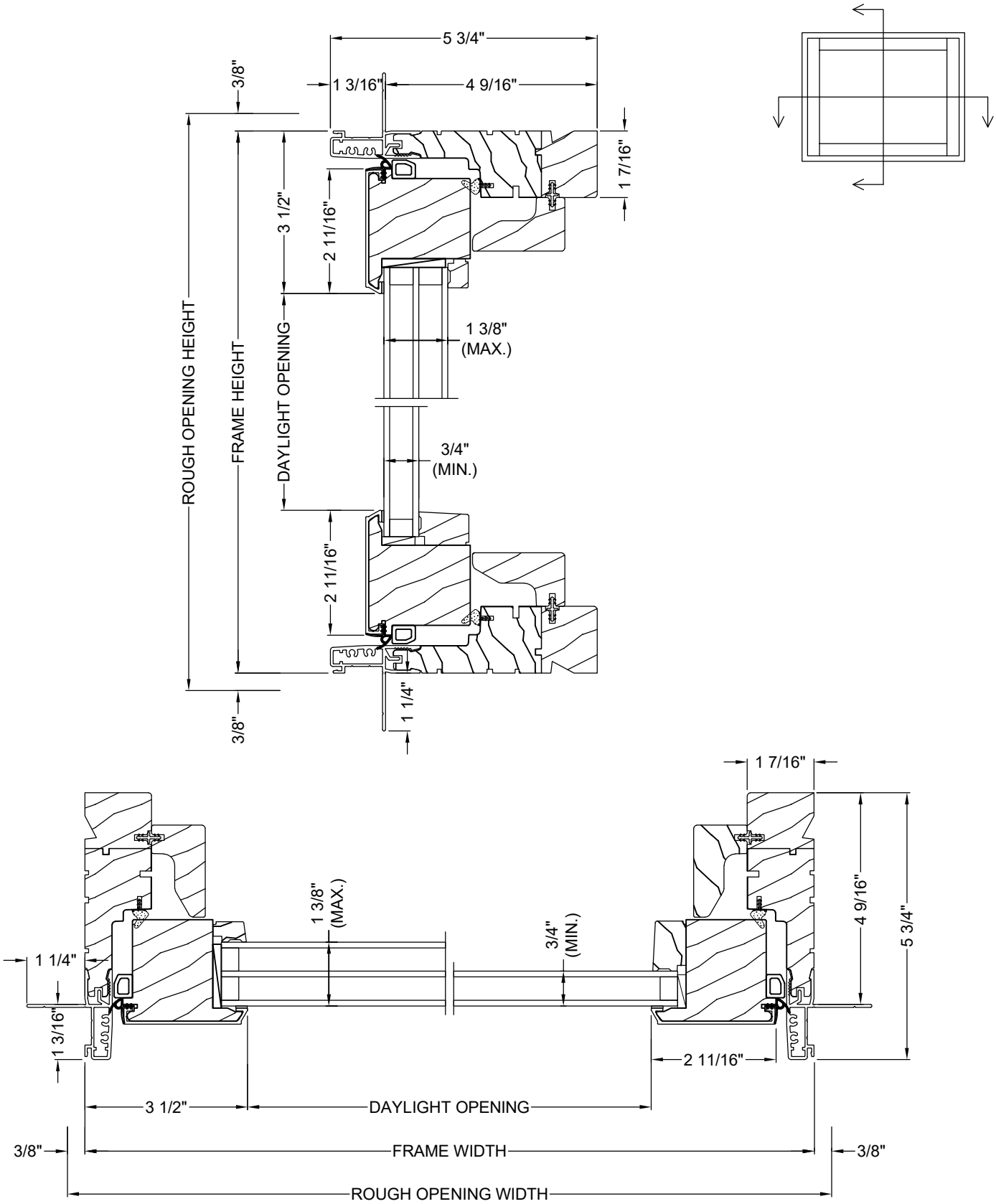

Clad Casement Narrow Sash - Operating

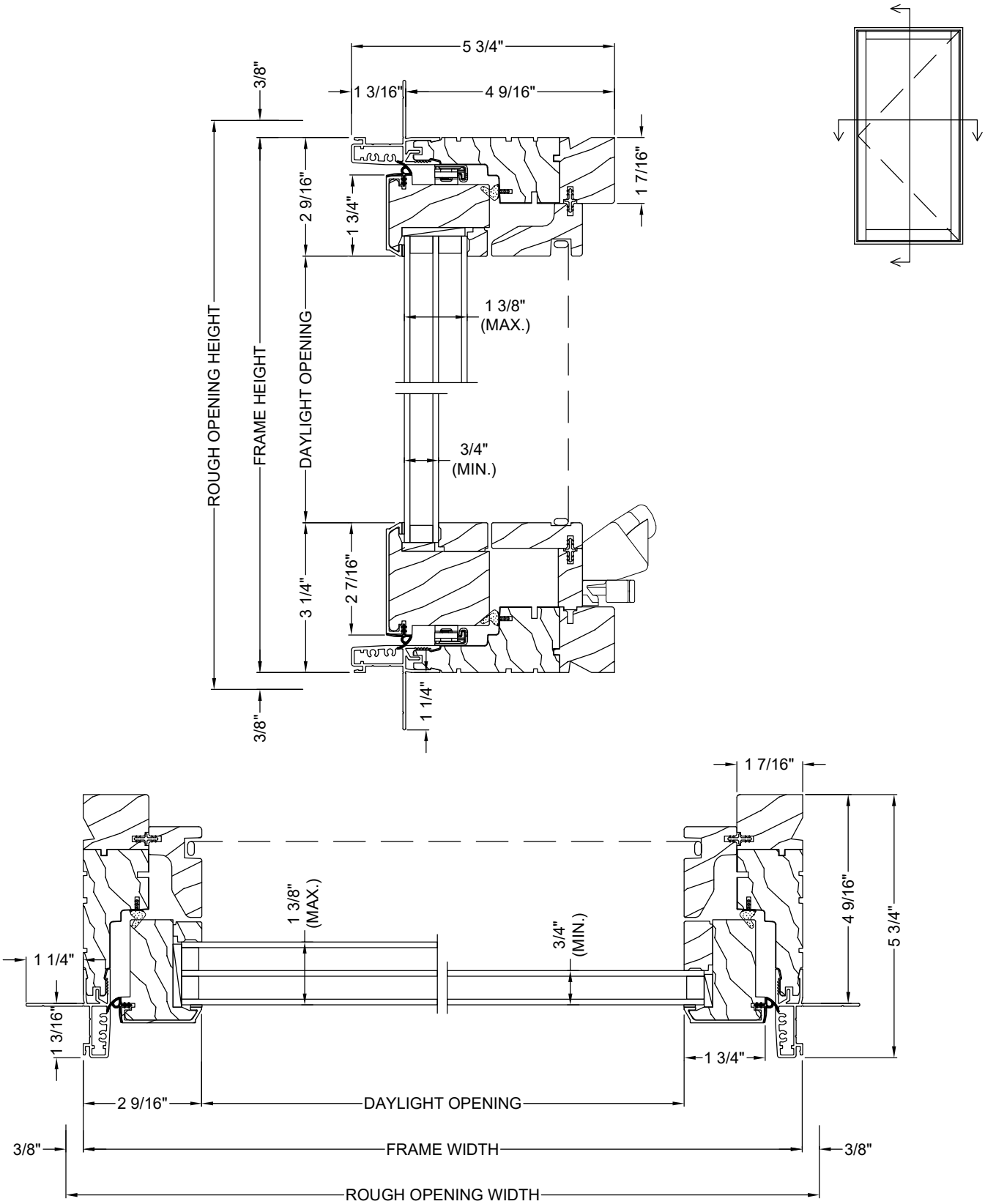

Section Views

Clad Casement Narrow Sash - Operating w/Retractable Screen

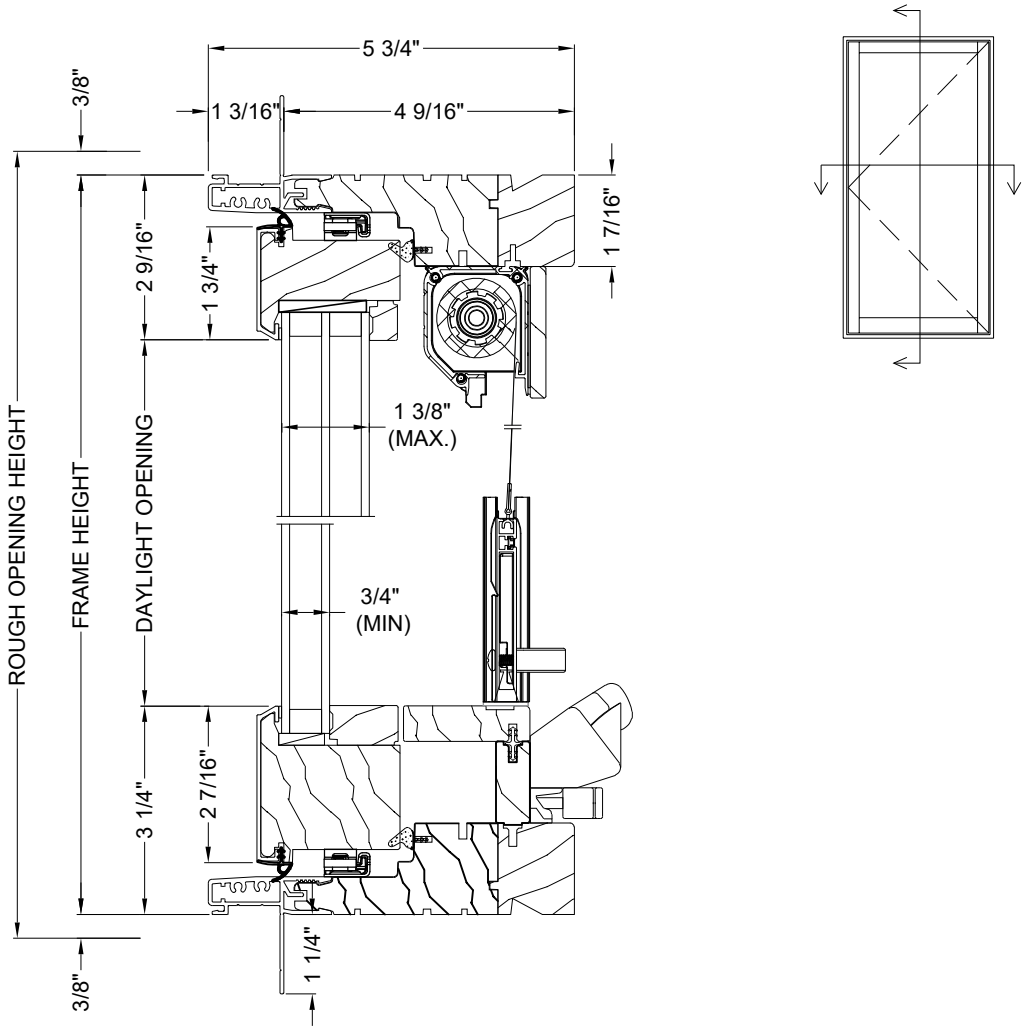

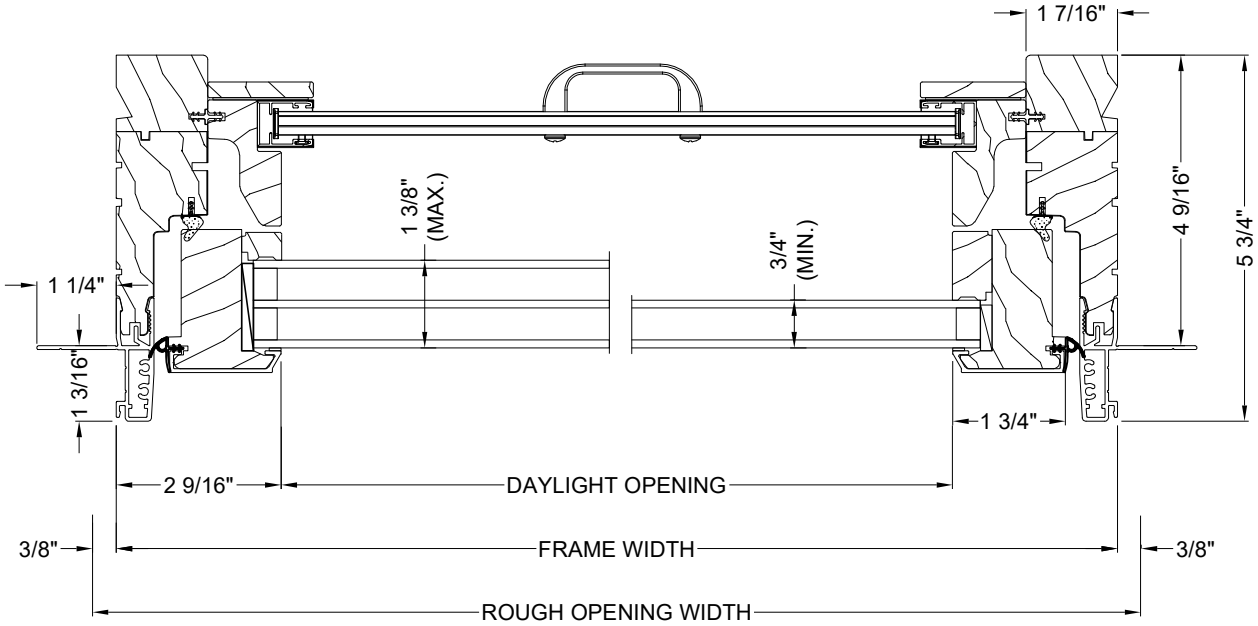

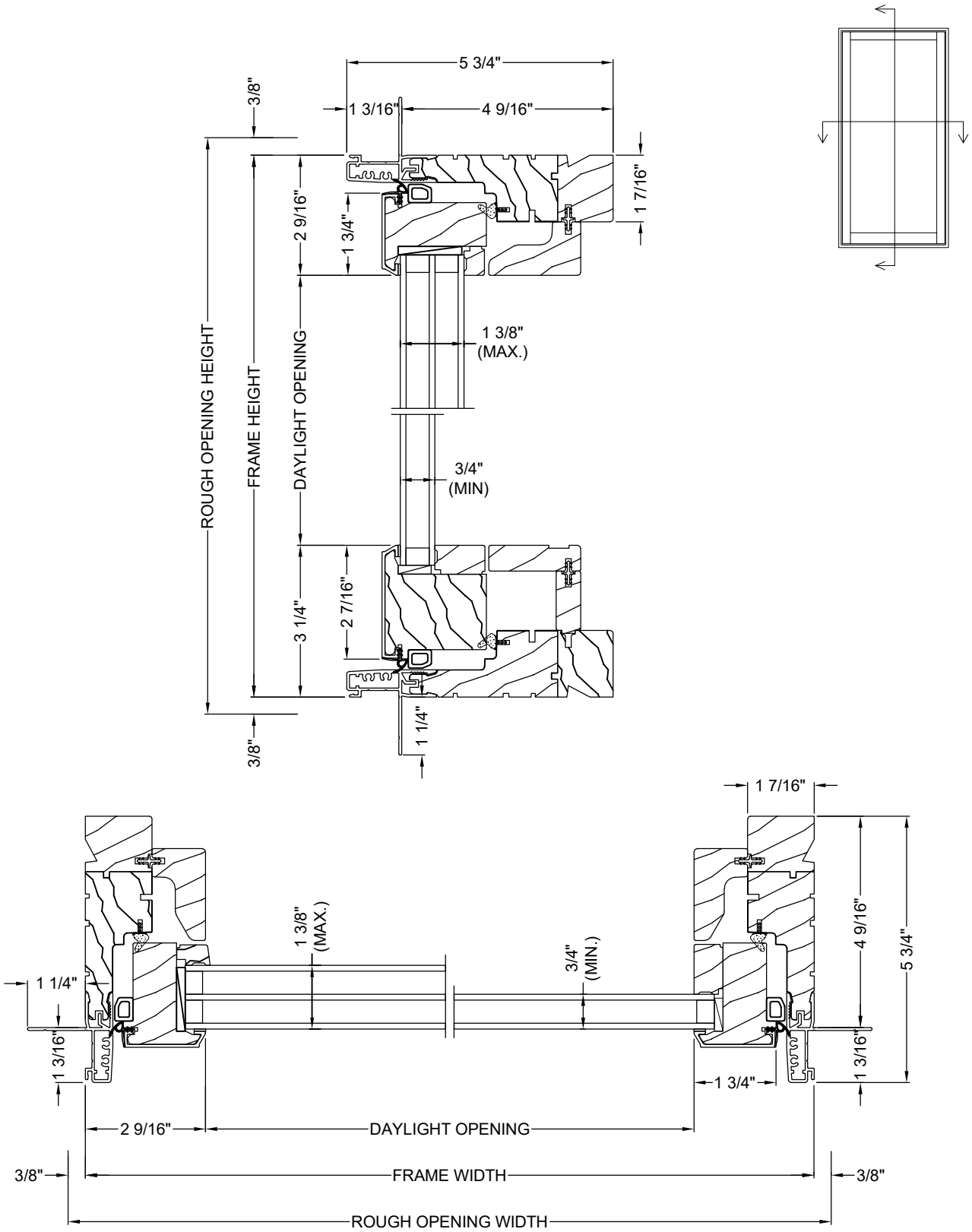
5 3/4"
1 3/16"
4 9/16"
3/8"
1 7/16"
2 9/16"
1 3/4"
ROUGH OPENING HEIGHT
FRAME HEIGHT
DAYLIGHT OPENING
1 3/8"
(MAX.)
3/4"
(MIN)
3 1/4"
2 7/16"
1 1/4"
3/8"
1 7/16"
1 3/8"
(MAX.)
3/4"
(MIN.)
4 9/16"
5 3/4"
1 1/4"
1 3/16"
1 3/16"
1 3/4"
2 9/16"
DAYLIGHT OPENING
3/8"
FRAME WIDTH
3/8"
ROUGH OPENING WIDTH

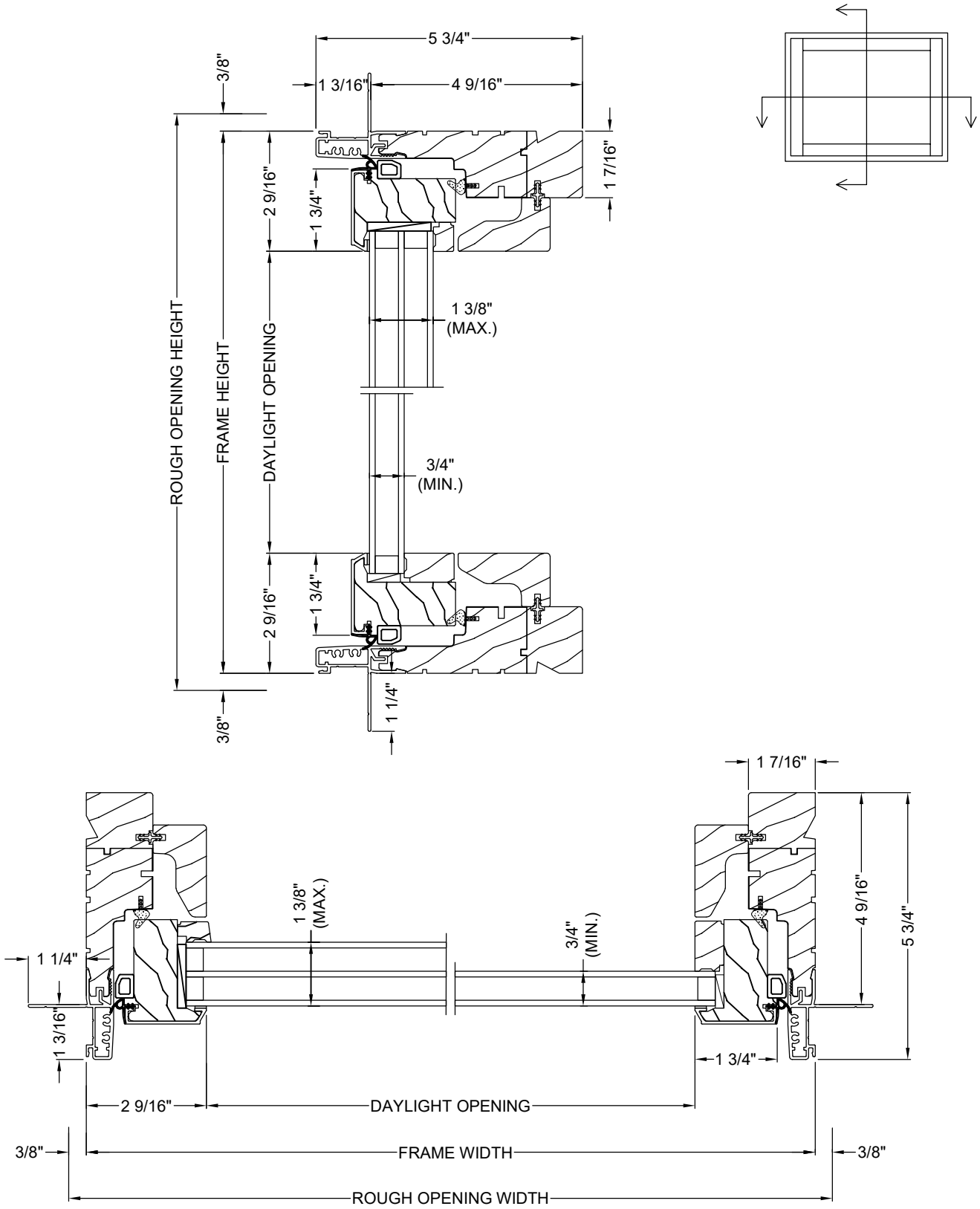
5 3/4"
1 3/16"
4 9/16"
3/8"
1 7/16"
2 9/16"
1 3/4"
1 3/8"
(MAX.)
ROUGH OPENING HEIGHT
FRAME HEIGHT
DAYLIGHT OPENING
3/4"
(MIN.)
2 9/16"
1 3/4"
1 1/4"
3/8"
1 7/16"
1 3/8"
(MAX.)
3/4"
(MIN.)
4 9/16"
5 3/4"
1 1/4"
1 3/16"
1 3/4"
2 9/16"
DAYLIGHT OPENING
3/8"
FRAME WIDTH
3/8"
ROUGH OPENING WIDTH

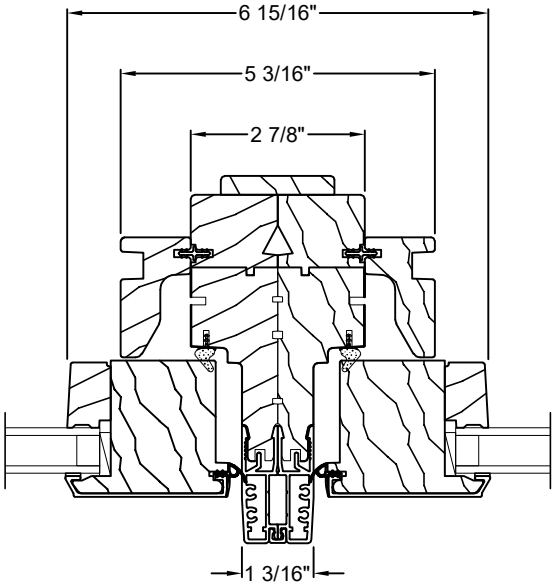

TIGHT MULL

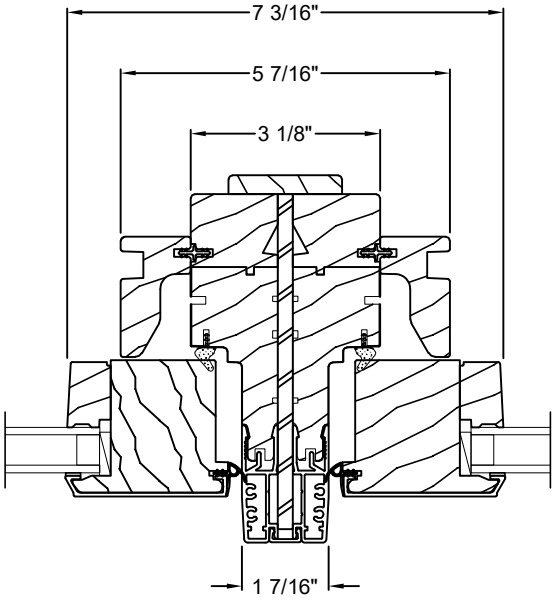

1/4" PLATE MULL

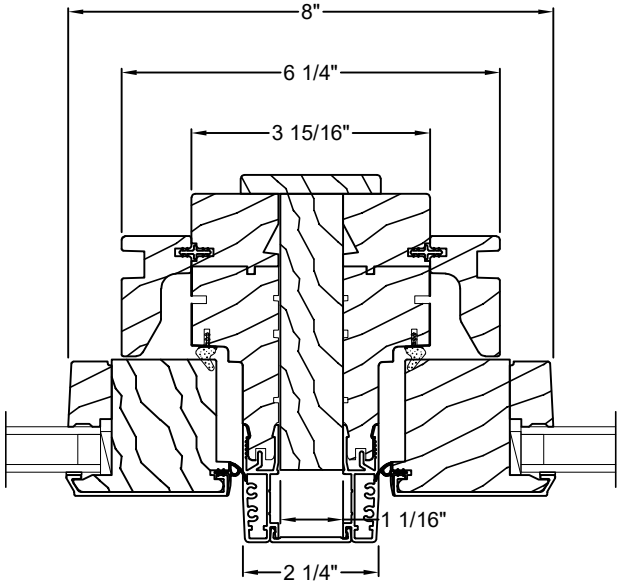

1" SOLID SPREAD MULL

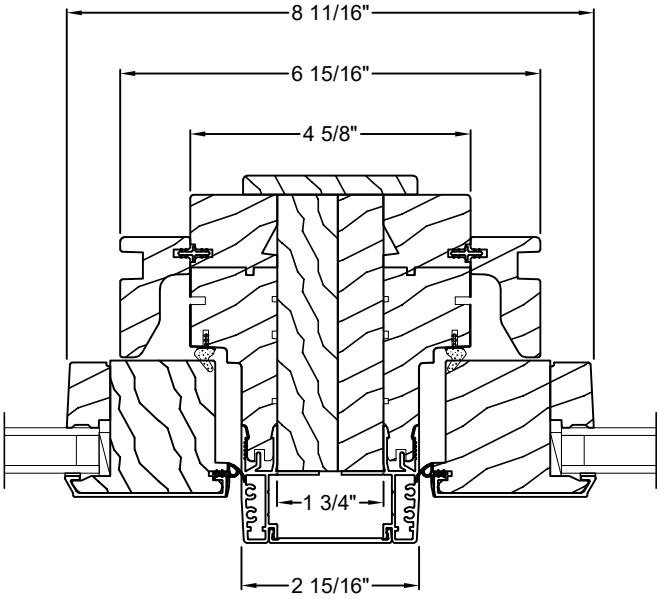

1 3/4" SOLID SPREAD MULL

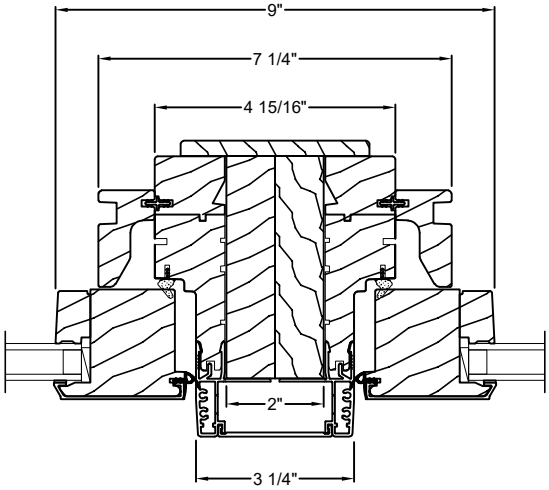

2" SOLID
SPREAD MULL

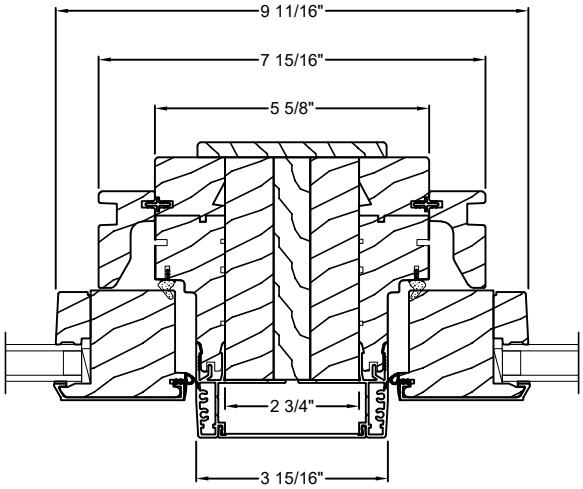

2 3/4" SOLID
SPREAD MULL

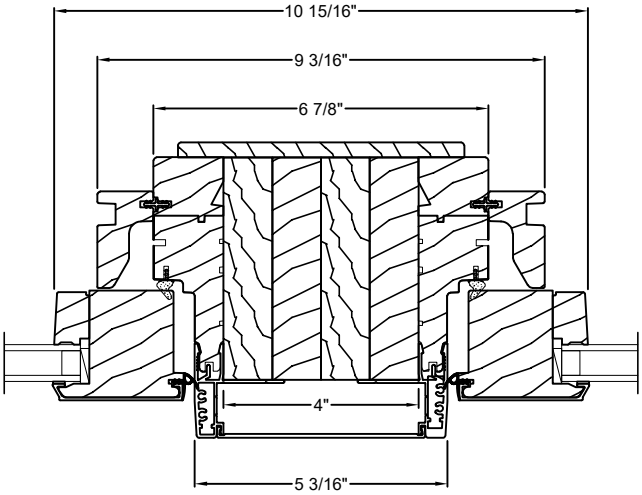

4" SOLID
SPREAD MULL

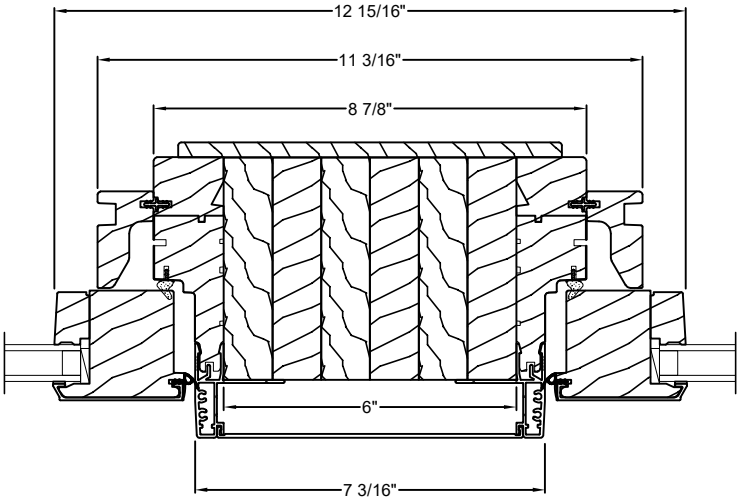

6" SOLID
SPREAD MULL

Section 6

Revit Models

Click HERE for the Clad Casement Revit Models

SIERRA PACIFIC WINDOWS

Section 7

Relative Dimensions and Formulas

Sierra Pacific Clad Casement-Narrow Sash					
REQUIRED DIMENSIONS & FORMULAS					
KNOWN DIMENSIONS		GLASS SIZE (actual)	FRAME SIZE	SASH SIZE	DAYLIGHT OPENING
	GLASS SIZE (actual)		Glass Width + 4.3125" Glass Height + 5"	Glass Width + 2.6875" Glass Height + 3.375"	Glass Width - .875" Glass Height - .875"
	FRAME SIZE	Frame Width - 4.3125" Frame Height - 5"		Frame Width - 1.625" Frame Height - 1.625"	Frame Width - 5.1875" Frame Height - 5.875"
	SASH SIZE	Sash Width - 2.6875" Sash Height - 3.375"	Sash Width + 1.625" Sash Height + 1.625"		Sash Width - 3.5625" Sash Height - 4.25"
	DAYLIGHT OPENING	DLO Width + .875" DLO Height + .875"	DLO Width + 5.1875" DLO Height + 5.875"	DLO Width + 3.5625" DLO Height + 4.25"	

Note: Frame width or height + 3/4" equals Rough Opening

Sierra Pacific Clad Casement-Wide Sash					
REQUIRED DIMENSIONS & FORMULAS					
KNOWN DIMENSIONS		GLASS SIZE (actual)	FRAME SIZE	SASH SIZE	DAYLIGHT OPENING
	GLASS SIZE (actual)		Glass Width + 5.875" Glass Height + 5.875"	Glass Width + 4.25" Glass Height + 4.25"	Glass Width - 1.125" Glass Height - 1.125"
	FRAME SIZE	Frame Width - 5.875" Frame Height - 5.875"		Frame Width - 1.625" Frame Height - 1.625"	Frame Width - 7" Frame Height - 7"
	SASH SIZE	Sash Width - 4.25" Sash Height - 4.25"	Sash Width + 1.625" Sash Height + 1.625"		Sash Width - 5.375" Sash Height - 5.375"
	DAYLIGHT OPENING	DLO Width + 1.125" DLO Height + 1.125"	DLO Width + 7" DLO Height + 7"	DLO Width + 5.375" DLO Height + 5.375"	

Note: Frame width or height + 3/4" equals Rough Opening

Flexscreen Screen (3-sided capture) Screen size >25" x 25" or Screen size one side ≥12 and <20 and ratio ≥2:1 or Screen size one side not ≥12 and one <20, ratio≥1.5:1	
Frame Width - 4.75"	Frame Height - 5.625"
Flexscreen Screen (2-sided capture) Screen size <25" x 25", ratio <1.5:1 or Screen size one side<12 and one >20, ratio <2:1	
Frame Width - 4.8125"	Frame Height - 5.625"

Retractable Screen Size	
Frame Width - 4.434"	Frame Height - 4.715"

Minimum/Maximum Frame Sizes	
Min. Frame Width 16.5"	Min. Frame Height 18"
Max. Frame Width 48"	Max. Frame Height 96"
Maximum Square Footage - 32	
Max. Square Footage w/Triple Glaze (Operable) - 21	

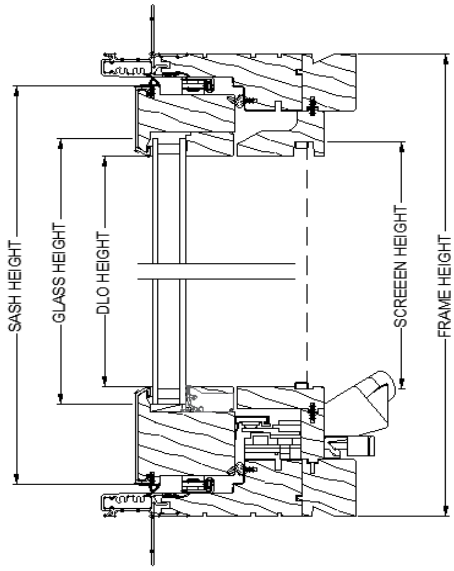

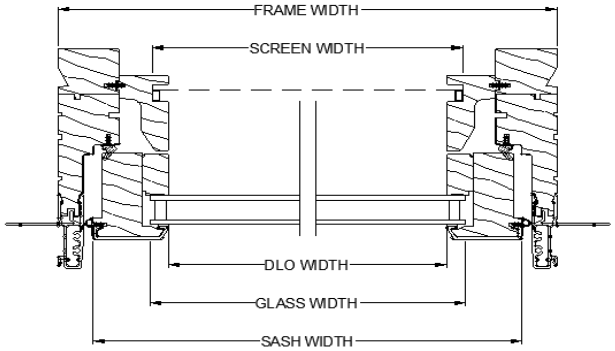

Narrow Sash Shown

Sierra Pacific Clad Casement Picture-Narrow Sash					
REQUIRED DIMENSIONS & FORMULAS					
KNOWN DIMENSIONS		GLASS SIZE (actual)	FRAME SIZE	SASH SIZE	DAYLIGHT OPENING
	GLASS SIZE (actual)		Glass Width + 4.3125" Glass Height + 5"	Glass Width + 2.6875" Glass Height + 3.375"	Glass Width - .875" Glass Height - .875"
	FRAME SIZE	Frame Width - 4.3125" Frame Height - 5"		Frame Width - 1.625" Frame Height - 1.625"	Frame Width - 5.1875" Frame Height - 5.875"
	SASH SIZE	Sash Width - 2.6875" Sash Height - 3.375"	Sash Width + 1.625" Sash Height + 1.625"		Sash Width - 3.5625" Sash Height - 4.25"
	DAYLIGHT OPENING	DLO Width + .875" DLO Height + .875"	DLO Width + 5.1875" DLO Height + 5.875"	DLO Width + 3.5625" DLO Height + 4.25"	

Note: Frame width or height + 3/4" equals Rough Opening

Sierra Pacific Clad Casement Picture-Wide Sash					
REQUIRED DIMENSIONS & FORMULAS					
KNOWN DIMENSIONS		GLASS SIZE (actual)	FRAME SIZE	SASH SIZE	DAYLIGHT OPENING
	GLASS SIZE (actual)		Glass Width + 5.875" Glass Height + 5.875"	Glass Width + 4.25" Glass Height + 4.25"	Glass Width - 1.125" Glass Height - 1.125"
	FRAME SIZE	Frame Width - 5.875" Frame Height - 5.875"		Frame Width - 1.625" Frame Height - 1.625"	Frame Width - 7" Frame Height - 7"
	SASH SIZE	Sash Width - 4.25" Sash Height - 4.25"	Sash Width + 1.625" Sash Height + 1.625"		Sash Width - 5.375" Sash Height - 5.375"
	DAYLIGHT OPENING	DLO Width + 1.125" DLO Height + 1.125"	DLO Width + 7" DLO Height + 7"	DLO Width + 5.375" DLO Height + 5.375"	

Note: Frame width or height + 3/4" equals Rough Opening

Minimum/Maximum Frame Sizes	
Min. Frame Width 12"	Min. Frame Height 12"
Max. Frame Width 120"	Max. Frame Height 120"
Maximum Square Footage - 56	
Max. Square Footage w/Triple Glaze - 52	

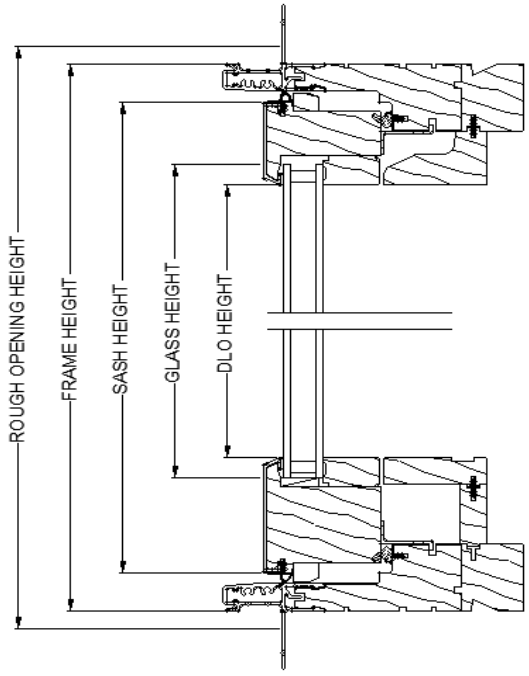

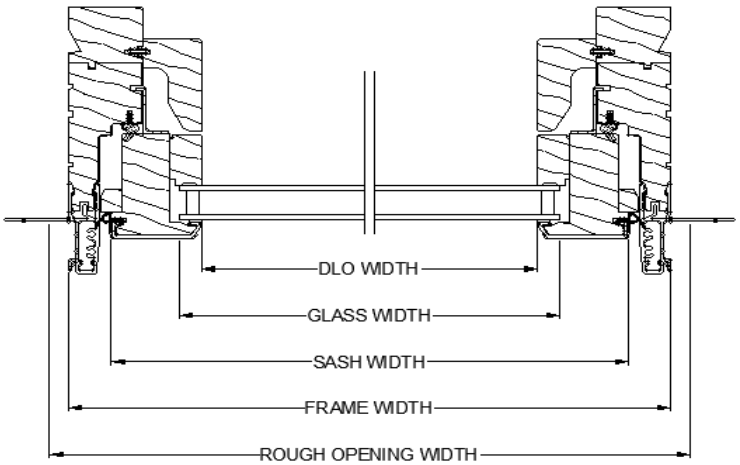

Narrow Sash Shown

Sierra Pacific Clad Casement Transom-Narrow Sash					
REQUIRED DIMENSIONS & FORMULAS					
KNOWN DIMENSIONS		GLASS SIZE (actual)	FRAME SIZE	SASH SIZE	DAYLIGHT OPENING
	GLASS SIZE (actual)		Glass Width + 4.3125" Glass Height + 4.3125"	Glass Width + 2.6875" Glass Height + 2.6875"	Glass Width - .875" Glass Height - .875"
	FRAME SIZE	Frame Width - 4.3125" Frame Height - 4.3125"		Frame Width - 1.625" Frame Height - 1.625"	Frame Width - 5.1875" Frame Height - 5.1875"
	SASH SIZE	Sash Width - 2.6875" Sash Height - 2.6875"	Sash Width + 1.625" Sash Height + 1.625"		Sash Width - 3.5625" Sash Height - 3.5625"
	DAYLIGHT OPENING	DLO Width + .875" DLO Height + .875"	DLO Width + 5.1875" DLO Height + 5.1875"	DLO Width + 3.5625" DLO Height + 3.5625"	

Note: Frame width or height + 3/4" equals Rough Opening

Sierra Pacific Clad Casement Transom-Wide Sash					
REQUIRED DIMENSIONS & FORMULAS					
KNOWN DIMENSIONS		GLASS SIZE (actual)	FRAME SIZE	SASH SIZE	DAYLIGHT OPENING
	GLASS SIZE (actual)		Glass Width + 5.875" Glass Height + 5.875"	Glass Width + 4.25" Glass Height + 4.25"	Glass Width - 1.125" Glass Height - 1.125"
	FRAME SIZE	Frame Width - 5.875" Frame Height - 5.875"		Frame Width - 1.625" Frame Height - 1.625"	Frame Width - 7" Frame Height - 7"
	SASH SIZE	Sash Width - 4.25" Sash Height - 4.25"	Sash Width + 1.625" Sash Height + 1.625"		Sash Width - 5.375" Sash Height - 5.375"
	DAYLIGHT OPENING	DLO Width + 1.125" DLO Height + 1.125"	DLO Width + 7" DLO Height + 7"	DLO Width + 5.375" DLO Height + 5.375"	

Note: Frame width or height + 3/4" equals Rough Opening

Minimum/Maximum Frame Sizes	
Min. Frame Width 12"	Min. Frame Height 12"
Max. Frame Width 120"	Max. Frame Height 120"
Maximum Square Footage - 56	
Max. Square Footage w/Triple Glaze - 52	

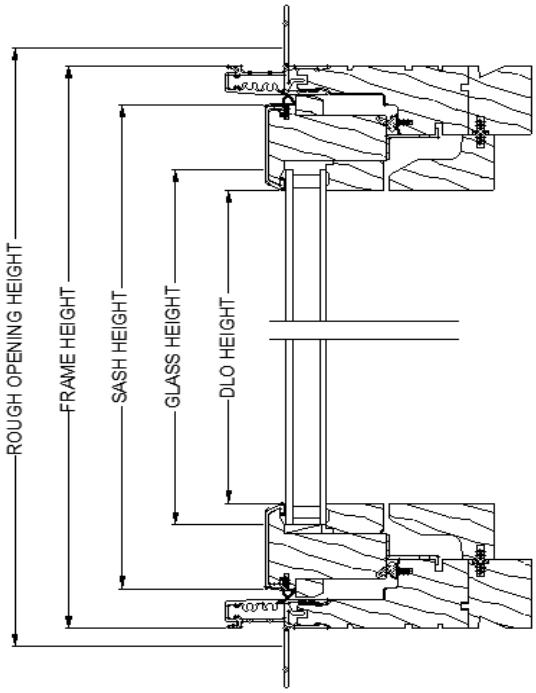

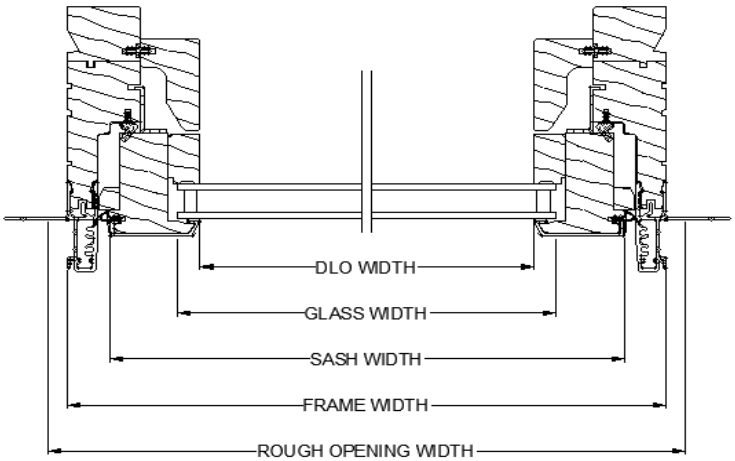

Narrow Sash Shown

SIERRA PACIFIC WINDOWS

Section 8

Performance Data - NFRC

Information Coming Soon

Information Coming Soon

Information Coming Soon

Information Coming Soon

Section 9

Performance Data – STC/OITC

STC - Sound Transmission Class Test Summary						
Product Type	**Glass Make-up**			**STC Rating**	**OITC Rating**	**Test Report #**
	Exterior Glazing	Airspace	Interior Glazing			
SP Aluminum Casement	1/8" (3.0mm)	1/2" (12.7mm)	1/8" (3.0mm)	27	23	ESP044433P-2

Section 10

Performance Data – air/water/Structural

Sierra Pacific Windows - SP Clad Casement Operator, Pictures & Awnings 5/27/2025

	Product	Tested Configuration	Size/Unit Type Tested	Performance Grade	Load	Water (PSF)	Air In/Ex (cfm/ft²)/ CAN Level	Comments -Required Upgrades	Test Report	Hallmark CCL #	FBC #	TDI #
SP Clad Casement	SP Casement		48" x 96" Single Unit	CW-PG50	+50/-50	7.52	.01/.01/A3	Limit Device	S3069.01	429-H-565.00		
	SP Casement		48" x 96" Single Unit	CW-PG50	+50/-50	7.52	0.01/0.01/A3	Limit Device; Through Frame Install	S4378.01	429-H-565.05		
	SP Casement	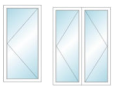	30" x 96" Single/Mulled Unit	CW-PG50	+50/-50	7.52	.01/.01/A3	None	S2881.01	429-H-565.10		
	SP Casement		36" x 84" Single/Mulled Unit	CW-PG50	+50/-50	7.52	.01/.01/A3	None	S3072.01	429-H-565.15		
	SP Casement		36" x 84" Single/Mulled Unit	Structural only +/-50	+50/-50	7.52	.01/.01/A3	Through Frame Install	S5166.01	429-H-656.23		
	SP Casement		40" x 96" Single/Mulled Unit	CW-PG50	+50/-50	7.52	.01/.01/A3	1/4" Aluminum Plate Mull; Anchorage on Either Side of Mull	R9149.01	Pending		
	SP Casement		36"/60" x 72" Mulled Unit	CW-PG50	+50/-50	7.52	.01/.01/A3	None	S32.67.01	429-H-565.25		
	SP Casement		36"/60" x 84" Mulled Unit	CW-PG50	+50/-50	7.52	.01/.01/A3	1/4" Aluminum Plate Mull; Anchorage on Either Side of Mull	S3717.01	Pending		
	SP Casement		36" x 72"-3/ 36" x 32"-3 Mulled Unit	LC-PG50	+50/-50	7.52	.01/.01/A3	1/4" Aluminum Horizontal Plate Mull; Anchorage on Either Side of Mull	S3266.01	429-H-565.19		
	SP Casement		36" x 72"-3/ 36" x 32"-3 Mulled Unit	Pending					Pending	Pending		
	SP Casement		36" x 36"-3/ 36" x 84"-3 Mulled Unit	CW-PG50	+50/-50	7.52	.01/.01/A3	1/4" Aluminum Vertical Plate Mull; Anchorage on Either Side of Mull	S5170.01	Pending		
SP Clad Awning	SP Awning		72" x 36" Single Unit	CW-PG50	+50/-50	7.52	.01/.01/A3	None	R9200.01	429-H-566.00		
	SP Awning		60" x 60" Single/Mulled Unit	CW-PG50	+50/-50	7.52	.01/.01/A3		S3265.01	429-H-566.12		
	SP Awning		48" x 72"-2 Direct Set/ 48" x 36"-2 Mulled Unit	CW-PG50	+50/-50	7.52	.01/.01/A3	1/4" Aluminum Horizontal Plate Mull; Anchorage on Either Side of Mulls - Mull qualifies Direct Set, Picture or Transom	S3264.01	429-H-566.08		
	SP Awning		96" x 72" Direct Set/ 48" x 36" -2	CW-PG35	+35/-35	5.43	.01/.01/A3	None - Mull qualifies Direct Set, Picture or Transom	S3082.01	429-H-566.04		
	SP Awning		96" x 72" Direct Set/ 48" x 36" -2	LC-PG45	+45/-45	6.75	.01/.01/A3	Anchorage on Either Side of Mull - Mull qualifies Direct Set, Picture or Transom	S4436.01	429-H-566.16		
SP Clad Picture/ Transom	SP Picture/ Transom		96" x 75" Single Unit	CW-PG50	+50/-50	7.52	.01/.01/FIXED	None	S4609.01	Pending		
	SP Picture/ Transom		84" x 96" Single Unit	CW-PG50	+50/-50	7.52	.01/.01/FIXED	None	S4379.01	429-H-565.31		
	SP Picture/ Transom		72" x 120 Single Unit	Pending					Pending	Pending		
	SP Picture/ Transom		84" x 96" Single Unit Springline	Pending					Pending	Pending		

SIERRA PACIFIC WINDOWS

Section 11

Egress

FRAME SIZE	CLEAR OPENING SQUARE FEET W/STD HINGE	CLEAR OPENING SQUARE FEET W/13 " PLUS HINGE	CLEAR OPENING SQUARE FEET W/BUTT HINGE	CLEAR OPENING WIDTH STD HINGE (Frame Width-10.953")	CLEAR OPENING WIDTH 13" PLUS HINGE (Frame Width-6.99")	CLEAR OPENING WIDTH BUTT HINGE (Frame Width-5.876")	CLEAR OPENING HEIGHT (Frame Height-5.869")
28 X 48	4.988	6.147	6.473	17.047	21.010	22.124	42.131
28 X 54	5.698	7.022	7.395	17.047	21.010	22.124	48.131
28 X 60	6.408	7.898	8.317	17.047	21.010	22.124	54.131
28 X 64	6.882	8.481	8.931	17.047	21.010	22.124	58.131
28 X 66	7.118	8.773	9.238	17.047	21.010	22.124	60.131
28 X 72	7.829	9.649	10.160	17.047	21.010	22.124	66.131
28 X 78	8.539	10.524	11.082	17.047	21.010	22.124	72.131
28 X 84	9.249	11.400	12.004	17.047	21.010	22.124	78.131
28 X 96 *	10.670	13.150	13.848	17.047	21.010	22.124	90.131
30 X 30	3.192	3.856	4.043	19.047	23.010	24.124	24.131
30 X 32	3.456	4.176	4.378	19.047	23.010	24.124	26.131
30 X 36	3.985	4.815	5.048	19.047	23.010	24.124	30.131
30 X 40	4.515	5.454	5.718	19.047	23.010	24.124	34.131
30 X 42	4.779	5.773	6.053	19.047	23.010	24.124	36.131
30 X 48	5.573	6.732	7.058	19.047	23.010	24.124	42.131
30 X 54	6.366	7.691	8.063	19.047	23.010	24.124	48.131
30 X 60	7.160	8.650	9.068	19.047	23.010	24.124	54.131
30 X 64	7.689	9.289	9.739	19.047	23.010	24.124	58.131
30 X 66	7.954	9.608	10.074	19.047	23.010	24.124	60.131
30 X 72	8.747	10.567	11.079	19.047	23.010	24.124	66.131
30 X 78	9.541	11.526	12.084	19.047	23.010	24.124	72.131
30 X 84	10.334	12.485	13.089	19.047	23.010	24.124	78.131
30 X 96 *	11.922	14.402	15.099	19.047	23.010	24.124	90.131
32 X 32	3.819	4.538	4.741	21.047	25.010	26.124	26.131
32 X 36	4.404	5.233	5.466	21.047	25.010	26.124	30.131
32 X 40	4.989	5.928	6.192	21.047	25.010	26.124	34.131
32 X 42	5.281	6.275	6.555	21.047	25.010	26.124	36.131
32 X 48	6.158	7.317	7.643	21.047	25.010	26.124	42.131
32 X 54	7.035	8.359	8.732	21.047	25.010	26.124	48.131
32 X 60	7.912	9.402	9.820	21.047	25.010	26.124	54.131
32 X 64	8.496	10.096	10.546	21.047	25.010	26.124	58.131
32 X 66	8.789	10.444	10.909	21.047	25.010	26.124	60.131
32 X 72	9.666	11.486	11.997	21.047	25.010	26.124	66.131
32 X 78	10.543	12.528	13.086	21.047	25.010	26.124	72.131
32 X 84	11.420	13.570	14.174	21.047	25.010	26.124	78.131
32 X 96 *	13.174	15.654	16.351	21.047	25.010	26.124	90.131
36 X 36	5.241	6.070	6.303	25.047	29.010	30.124	30.131
36 X 40	5.937	6.876	7.140	25.047	29.010	30.124	34.131
36 X 42	6.285	7.279	7.558	25.047	29.010	30.124	36.131
36 X 48	7.328	8.488	8.814	25.047	29.010	30.124	42.131
36 X 54	8.372	9.696	10.069	25.047	29.010	30.124	48.131
36 X 60	9.415	10.905	11.324	25.047	29.010	30.124	54.131
36 X 64	10.111	11.711	12.161	25.047	29.010	30.124	58.131
36 X 66	10.459	12.114	12.579	25.047	29.010	30.124	60.131
36 X 72	11.503	13.323	13.834	25.047	29.010	30.124	66.131
36 X 78	12.546	14.531	15.089	25.047	29.010	30.124	72.131
36 X 84	13.590	15.740	16.345	25.047	29.010	30.124	78.131
36 X 96 *	15.677	18.158	18.855	25.047	29.010	30.124	90.131
42 * X 42	7.790	8.784	9.064	31.047	35.010	36.124	36.131
42 * X 48	9.084	10.243	10.569	31.047	35.010	36.124	42.131
42 * X 54	10.377	11.702	12.074	31.047	35.010	36.124	48.131
42 * X 60	11.671	13.161	13.579	31.047	35.010	36.124	54.131
42 * X 64	12.533	14.133	14.583	31.047	35.010	36.124	58.131
42 * X 66	12.964	14.619	15.085	31.047	35.010	36.124	60.131
42 * X 72	14.258	16.078	16.590	31.047	35.010	36.124	66.131
42 * X 78	15.552	17.537	18.095	31.047	35.010	36.124	72.131
42 * X 84	16.845	18.996	19.600	31.047	35.010	36.124	78.131
42 * X 96 *	19.433	21.913	22.610	31.047	35.010	36.124	90.131

Shading indicates clear opening meets egress requirements.

Egress Data:

The following opening specifications have been provided to assist you in determining compliance to Egress codes based on BOCA and UBC code requirements as follows:

1. The units must be operable from the inside without the use of separate tools.
2. Sill clear opening to the floor cannot exceed 44".
3. All egress from sleeping rooms must have a minimum net clear opening of 5.7 square feet.
4. The minimum clear opening width is 20".
5. The minimum clear opening height is 24".

Clear Opening Formulas:

Std Hinge

Frame Width - 10.953" = Clear Opening Width

Frame Height - 5.869" = Clear Opening Height

13" Plus Hinge

Frame Width - 6.99" = Clear Opening Width

Frame Height - 5.869" = Clear Opening Height

Butt Hinge

Frame Width - 5.876" = Clear Opening Width

Frame Height - 5.869" = Clear Opening Height

* Size requires a Limit Device. Egress clear opening requirements can be met with the use of a Window Opening Control Device.

FRAME SIZE	CLEAR OPENING SQUARE FEET W/STD HINGE	CLEAR OPENING SQUARE FEET W/13 " PLUS HINGE	CLEAR OPENING SQUARE FEET W/BUTT HINGE	CLEAR OPENING WIDTH STD HINGE (Frame Width-10.953")	CLEAR OPENING WIDTH 13" PLUS HINGE (Frame Width-6.99")	CLEAR OPENING WIDTH BUTT HINGE (Frame Width-5.876")	CLEAR OPENING HEIGHT (Frame Height-5.869")
48 * X 48	10.839	11.999	12.324	37.047	41.010	42.124	42.131
48 * X 54	12.383	13.707	14.080	37.047	41.010	42.124	48.131
48 * X 60	13.926	15.416	15.835	37.047	41.010	42.124	54.131
48 * X 64	14.955	16.555	17.005	37.047	41.010	42.124	58.131
48 * X 66	15.470	17.125	17.590	37.047	41.010	42.124	60.131
48 * X 72	17.014	18.834	19.345	37.047	41.010	42.124	66.131
48 * X 78	18.557	20.542	21.100	37.047	41.010	42.124	72.131
48 * X 84	20.101	22.251	22.855	37.047	41.010	42.124	78.131
48 * X 96 *	23.188	25.669	26.366	37.047	41.010	42.124	90.131

Shading indicates clear opening meets egress requirements.

Egress Data:

The following opening specifications have been provided to assist you in determining compliance to Egress codes based on BOCA and UBC code requirements as follows:

1. The units must be operable from the inside without the use of separate tools.
2. Sill clear opening to the floor cannot exceed 44".
3. All egress from sleeping rooms must have a minimum net clear opening of 5.7 square feet.
4. The minimum clear opening width is 20".
5. The minimum clear opening height is 24".

Clear Opening Formulas:

Std Hinge

Frame Width - 10.953" = Clear Opening Width

Frame Height - 5.869" = Clear Opening Height

13" Plus Hinge

Frame Width - 6.99" = Clear Opening Width

Frame Height - 5.869" = Clear Opening Height

Butt Hinge

Frame Width - 5.876" = Clear Opening Width

Frame Height - 5.869" = Clear Opening Height

* Size requires a Limit Device. Egress clear opening requirements can be met with the use of a Window Opening Control Device.

FRAME SIZE	CLEAR OPENING SQUARE FEET W/STD HINGE	CLEAR OPENING SQUARE FEET W/13 " PLUS HINGE	CLEAR OPENING SQUARE FEET W/BUTT HINGE	CLEAR OPENING WIDTH STD HINGE (Frame Width-11.46")	CLEAR OPENING WIDTH 13" PLUS HINGE (Frame Width-7.497")	CLEAR OPENING WIDTH BUTT HINGE (Frame Width-6.383")	CLEAR OPENING HEIGHT (Frame Height-7.714")
28 X 48	4.627	5.736	6.048	16.540	20.503	21.617	40.286
28 X 54	5.316	6.590	6.948	16.540	20.503	21.617	46.286
28 X 60	6.006	7.445	7.849	16.540	20.503	21.617	52.286
28 X 64	6.465	8.014	8.450	16.540	20.503	21.617	56.286
28 X 66	6.695	8.299	8.750	16.540	20.503	21.617	58.286
28 X 72	7.384	9.153	9.650	16.540	20.503	21.617	64.286
28 X 78	8.073	10.007	10.551	16.540	20.503	21.617	70.286
28 X 84	8.762	10.862	11.452	16.540	20.503	21.617	76.286
28 X 96 *	10.141	12.570	13.253	16.540	20.503	21.617	88.286
30 X 30	2.869	3.483	3.655	18.540	22.503	23.617	22.286
30 X 32	3.127	3.795	3.983	18.540	22.503	23.617	24.286
30 X 36	3.642	4.420	4.639	18.540	22.503	23.617	28.286
30 X 40	4.157	5.045	5.295	18.540	22.503	23.617	32.286
30 X 42	4.414	5.358	5.623	18.540	22.503	23.617	34.286
30 X 48	5.187	6.296	6.607	18.540	22.503	23.617	40.286
30 X 54	5.959	7.233	7.591	18.540	22.503	23.617	46.286
30 X 60	6.732	8.171	8.575	18.540	22.503	23.617	52.286
30 X 64	7.247	8.796	9.231	18.540	22.503	23.617	56.286
30 X 66	7.504	9.108	9.559	18.540	22.503	23.617	58.286
30 X 72	8.277	10.046	10.543	18.540	22.503	23.617	64.286
30 X 78	9.049	10.984	11.527	18.540	22.503	23.617	70.286
30 X 84	9.822	11.921	12.511	18.540	22.503	23.617	76.286
30 X 96 *	11.367	13.797	14.480	18.540	22.503	23.617	88.286
32 X 32	3.464	4.132	4.320	20.540	24.503	25.617	24.286
32 X 36	4.035	4.813	5.032	20.540	24.503	25.617	28.286
32 X 40	4.605	5.494	5.744	20.540	24.503	25.617	32.286
32 X 42	4.891	5.834	6.099	20.540	24.503	25.617	34.286
32 X 48	5.746	6.855	7.167	20.540	24.503	25.617	40.286
32 X 54	6.602	7.876	8.234	20.540	24.503	25.617	46.286
32 X 60	7.458	8.897	9.301	20.540	24.503	25.617	52.286
32 X 64	8.029	9.578	10.013	20.540	24.503	25.617	56.286
32 X 66	8.314	9.918	10.369	20.540	24.503	25.617	58.286
32 X 72	9.170	10.939	11.436	20.540	24.503	25.617	64.286
32 X 78	10.026	11.960	12.504	20.540	24.503	25.617	70.286
32 X 84	10.881	12.981	13.571	20.540	24.503	25.617	76.286
32 X 96 *	12.593	15.023	15.706	20.540	24.503	25.617	88.286
36 X 36	4.820	5.599	5.818	24.540	28.503	29.617	28.286
36 X 40	5.502	6.391	6.640	24.540	28.503	29.617	32.286
36 X 42	5.843	6.786	7.052	24.540	28.503	29.617	34.286
36 X 48	6.865	7.974	8.286	24.540	28.503	29.617	40.286
36 X 54	7.888	9.162	9.520	24.540	28.503	29.617	46.286
36 X 60	8.910	10.349	10.754	24.540	28.503	29.617	52.286
36 X 64	9.592	11.141	11.577	24.540	28.503	29.617	56.286
36 X 66	9.933	11.537	11.988	24.540	28.503	29.617	58.286
36 X 72	10.955	12.725	13.222	24.540	28.503	29.617	64.286
36 X 78	11.978	13.912	14.456	24.540	28.503	29.617	70.286
36 X 84	13.000	15.100	15.690	24.540	28.503	29.617	76.286
36 X 96 *	15.045	17.475	18.158	24.540	28.503	29.617	88.286
42 * X 42	7.271	8.215	8.480	30.540	34.503	35.617	34.286
42 * X 48	8.544	9.653	9.964	30.540	34.503	35.617	40.286
42 * X 54	9.816	11.090	11.448	30.540	34.503	35.617	46.286
42 * X 60	11.089	12.528	12.932	30.540	34.503	35.617	52.286
42 * X 64	11.937	13.486	13.922	30.540	34.503	35.617	56.286
42 * X 66	12.361	13.966	14.416	30.540	34.503	35.617	58.286
42 * X 72	13.634	15.403	15.901	30.540	34.503	35.617	64.286
42 * X 78	14.906	16.841	17.385	30.540	34.503	35.617	70.286
42 * X 84	16.179	18.278	18.869	30.540	34.503	35.617	76.286
42 * X 96 *	18.724	21.154	21.837	30.540	34.503	35.617	88.286

Shading indicates clear opening meets egress requirements.

Egress Data:

The following opening specifications have been provided to assist you in determining compliance to Egress codes based on BOCA and UBC code requirements as follows:

1. The units must be operable from the inside without the use of separate tools.
2. Sill clear opening to the floor cannot exceed 44".
3. All egress from sleeping rooms must have a minimum net clear opening of 5.7 square feet.
4. The minimum clear opening width is 20".
5. The minimum clear opening height is 24".

Clear Opening Formulas:

Std Hinge

Frame Width - 11.46" = Clear Opening Width

Frame Height - 7.714" = Clear Opening Height

13" Plus Hinge

Frame Width - 7.497" = Clear Opening Width

Frame Height - 7.714" = Clear Opening Height

Butt Hinge

Frame Width - 6.383" = Clear Opening Width

Frame Height - 7.714" = Clear Opening Height

* Size requires a Limit Device. Egress clear opening requirements can be met with the use of a Window Opening Control Device.

Sierra Pacific Clad Casement w/Retractable Screen

FRAME SIZE	CLEAR OPENING SQUARE FEET W/STD HINGE	CLEAR OPENING SQUARE FEET W/13 " PLUS HINGE	CLEAR OPENING SQUARE FEET W/BUTT HINGE	CLEAR OPENING WIDTH STD HINGE (Frame Width-11.46")	CLEAR OPENING WIDTH 13" PLUS HINGE (Frame Width-7.497")	CLEAR OPENING WIDTH BUTT HINGE (Frame Width-6.383")	CLEAR OPENING HEIGHT (Frame Height-7.714")
48 * X 48	10.223	11.331	11.643	36.540	40.503	41.617	40.286
48 * X 54	11.745	13.019	13.377	36.540	40.503	41.617	46.286
48 * X 60	13.268	14.707	15.111	36.540	40.503	41.617	52.286
48 * X 64	14.283	15.832	16.267	36.540	40.503	41.617	56.286
48 * X 66	14.790	16.394	16.845	36.540	40.503	41.617	58.286
48 * X 72	16.313	18.082	18.579	36.540	40.503	41.617	64.286
48 * X 78	17.835	19.769	20.313	36.540	40.503	41.617	70.286
48 * X 84	19.358	21.457	22.047	36.540	40.503	41.617	76.286
48 * X 96 *	22.403	24.832	25.515	36.540	40.503	41.617	88.286

Shading indicates clear opening meets egress requirements.

Egress Data:

The following opening specifications have been provided to assist you in determining compliance to Egress codes based on BOCA and UBC code requirements as follows:

1. The units must be operable from the inside without the use of separate tools.
2. Sill clear opening to the floor cannot exceed 44".
3. All egress from sleeping rooms must have a minimum net clear opening of 5.7 square feet.
4. The minimum clear opening width is 20".
5. The minimum clear opening height is 24".

Clear Opening Formulas:

Std Hinge

Frame Width - 11.46" = Clear Opening Width

Frame Height - 7.714" = Clear Opening Height

13" Plus Hinge

Frame Width - 7.497" = Clear Opening Width

Frame Height - 7.714" = Clear Opening Height

Butt Hinge

Frame Width - 6.383" = Clear Opening Width

Frame Height - 7.714" = Clear Opening Height

* Size requires a Limit Device. Egress clear opening requirements can be met with the use of a Window Opening Control Device.